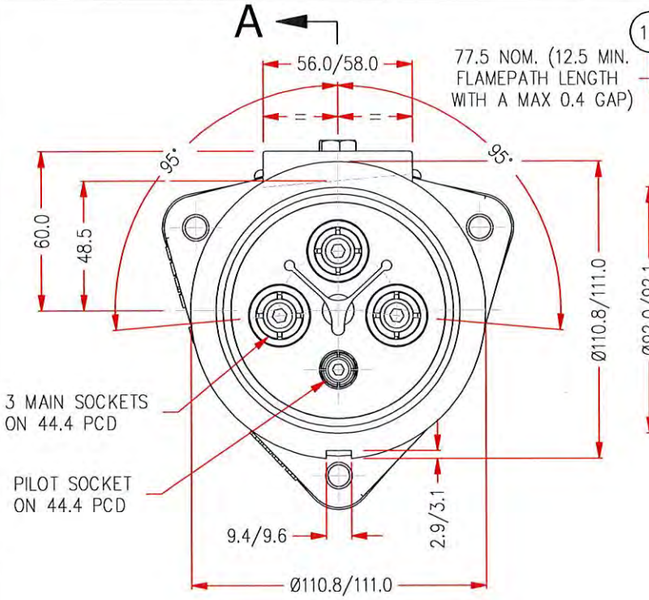

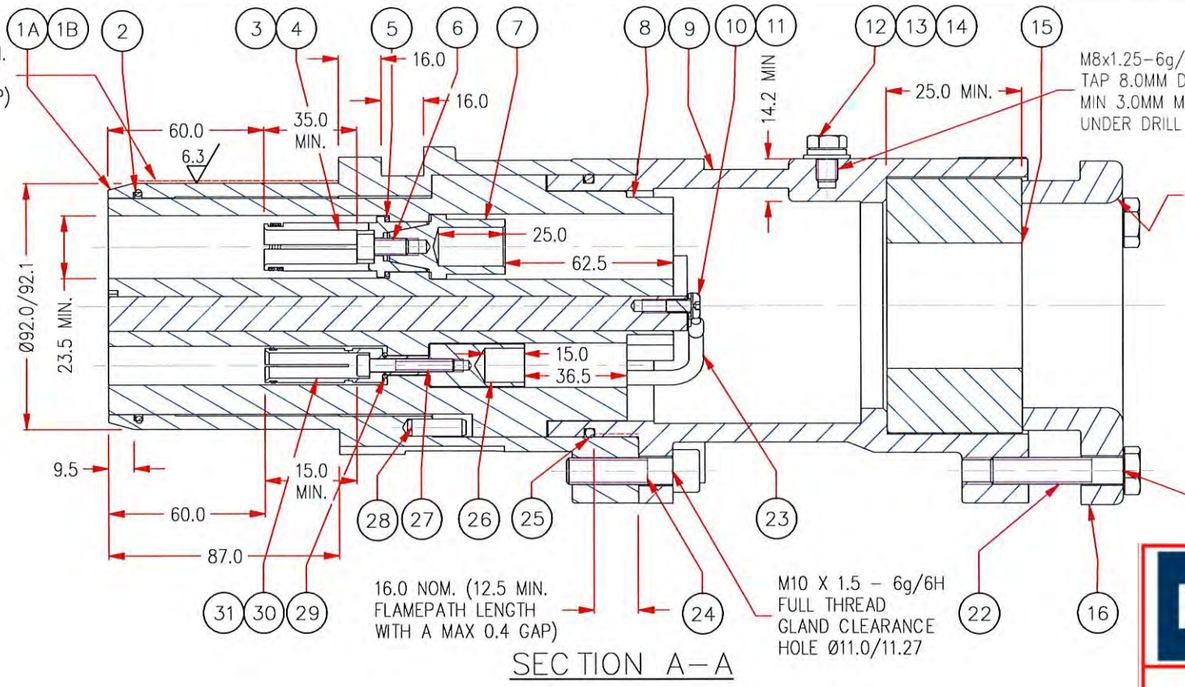

SECTION A–A

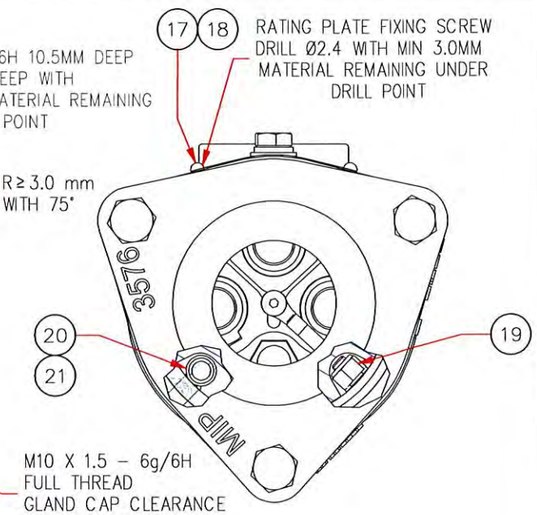

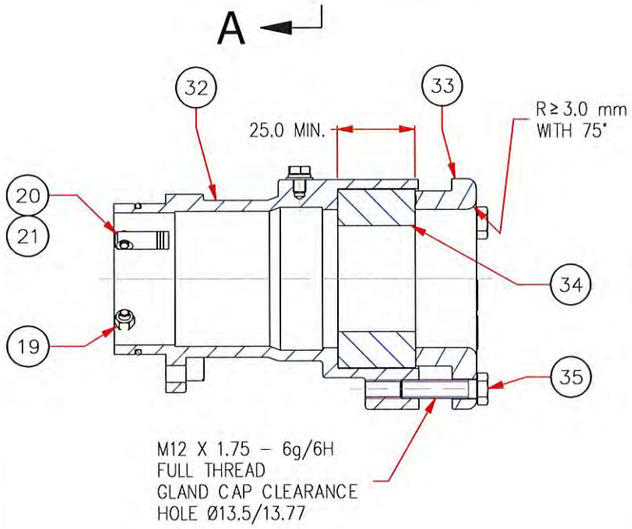

OPTIONAL LARGE GLAND ASSEMBLY

3054 SERIES GROMMETS			
PART No.	CABLE ACCEPTANCE	PART No.	CABLE ACCEPTANCE
3054–25	22.0–25.0	3054–54	50.0–54.0
3054–31	24.0–31.0	3054–57	53.0–57.0
3054–35	30.0–35.0	3054–60	56.0–60.0
3054–38	34.0–38.0	3054–64	59.0–64.0
3054–41	37.0–41.0	3054–67	63.0–67.0
3054–45	40.0–45.0	3054–70	66.0–70.0
3054–47	44.0–47.0	3054–73	69.0–73.0
3054–51	46.0–51.0	3054–76	72.0–76.0

3394 SERIES GROMMETS			
PART No.	CABLE ACCEPTANCE	PART No.	CABLE ACCEPTANCE
3394–58	53.0–58.0	3394–75	71.0–75.0
3394–61	56.0–61.0	3394–78	74.0–78.0
3394–63	59.0–63.0	3394–81	77.0–81.0
3394–66	62.0–66.0	3394–84	80.0–84.0
3394–69	65.0–69.0	3394–87	83.0–87.0
3394–72	68.0–72.0		

MARKING DETAILS

M.IP.
AF334S@*
300A
3300V
@ NOSE CONE S=ST. STEEL
BLANK=BRONZE
* GLAND 3=SMALL
4=LARGE
IP66/68
Ex db I Mb
IECEx ExTC 22.0037X
ANZEx 22.4181
TYPE A
S.O xxxxx–xx
WARNING
DO NOT SEPARATE WHEN ENERGIZED

Ex TESTING & CERTIFICATION

IECEx ExTC 22.0037X-0

ANZEx 22.4181-0

This document is approved as specifed in the listed certificate

ITEM	QTY	PART NUMBER	DESCRIPTION	MATERIAL
35	3	AH113135	M12 X 50 HEX HD SCREW	ST. STEEL
34	1	3394 SERIES	No. 4 CABLE GLAND GROMMET	NEOPRENE RUBBER
33	1	3399B	No. 4 GLAND CAP CASTING	HIGH TENSILE BRASS – NOTE 6 C86500 TO AS 1565–1996
32	1	4246–1B	GLAND BODY CASTING(LARGE)	HIGH TENSILE BRASS – NOTE 6 C86500 TO AS 1565–1996
31	1	AH201405	CONTACT SOCKET SPRING	ST. STEEL
30	1	3138–2	PILOT SOCKET	(COPPER) C14700 OR C11000 OR C10100 TO AS/NZS 1567–1997 SILVER PL. TO AS 1856–2004 CuAg 08
29	1	AI019030	O'RING ID 6.07 X SECT 1.78	NITRILE
28	2	AH002987	1/4" X 7/8" SELLOCK PIN	STEEL–ZINC PL.
27	1	AH009834	3/16" UNC X 11/4" SKT HD SCREW	ST. STEEL
26	1	3984	PILOT THIMBLE	(COPPER) C14700 OR C11000 OR C10100 TO AS/NZS 1567–1997
25	1	AI019011	O'RING ID 91.67 X SECT 3.53	NITRILE
24	3	AH117113	M10 X 40 SKT HD SET SCREW (ISO4762)	ST. STEEL
23	1	3191–2	6.0mm² EARTH CONNECTOR	PVC INSUL. CABLE
22	3	AH113116S	M10 X 50 HEX HD SCREW (ISO4017)	ST. STEEL
21	4	AH151028	M6 X 16 CSK PHILLIPS HD SCREW	ST. STEEL
20	3	4648 SERIES	EARTH THIMBLE	(COPPER) C14700 OR C11000 OR C10100 TO AS/NZS 1567–1997
19	1	AH151032	M6 NYLOC NUT	STEEL–ZINC PL.
18	1	AX004076	RATING PLATE	BRASS
17	2	AH009788	No.4 GAUGE X 3/16" U–DRIVE SCREW	STEEL–ZINC PL.
16	1	3576B	No. 3 GLAND CAP CASTING	HIGH TENSILE BRASS – NOTE 6 C86500 TO AS 1565–1996
15	1	3054 SERIES	No. 3 CABLE GLAND GROMMET	NEOPRENE RUBBER
14	1	AH009277	5/16" X 5/8" X 18 WASHER	STEEL–ZINC PL.
13	1	AH009363	5/16" SQ SECT SPRING WASHER	STEEL–ZINC PL.
12	1	AH113091	M8 X 10 HEX HD SET SCREW	STEEL–ZINC PL.
11	1	AH009380	3/16" STAR WASHER	STEEL–ZINC PL.
10	1	AH117117	M5x10 BUTTON HD CAP SCREW	ST. STEEL
9	1	3339–1B	GLAND BODY CASTING	HIGH TENSILE BRASS – NOTE 6 C86500 TO AS 1565–1996
8	1	3960	INTERIOR MOULDING	DMC 6804GTB
7	3	3962 SERIES	MAIN THIMBLE	(COPPER) C14700 OR C11000 OR C10100 TO AS/NZS 1567–1997 SILVER PL. TO AS 1856–2004 CuAg 08
6	3	AH009857	1/4" UNC X 1/2" SKT HD SCREW	ST. STEEL
5	3	AI019032	O'RING ID 18.77 X SECT 1.78	NITRILE
4	3	3981	MAIN SOCKET	(COPPER) C14700 OR C11000 OR C10100 TO AS/NZS 1567–1997 SILVER PL. TO AS 1856–2004 CuAg 08
3	6	AH201361	CONTACT SOCKET SPRING	ST. STEEL
2	1	AI019023	O'RING ID 82.22 X SECT 2.62	NITRILE
1B	1	3342–1B	BODY CASTING	HIGH TENSILE BRASS – NOTE 6 C86500 TO AS 1565–1996
1A	1	3342–1SS	BODY CASTING	ST. STEEL 303 MIN. GRADE

Parts List

NOTES

1. MINIMUM WALL THICKNESS 3.0mm UNLESS OTHERWISE SPECIFIED ON THE DRAWING.
2. IN CASE OF BLIND HOLES FOR SCREWS, THE REMAINING THICKNESS OF MATERIAL UNDER THE HOLE IS A MINIMUM OF ONE–THIRD OF THE SCREW DIAMETER OR 3MM, WHICHEVER IS GREATER.
3. THE SPECIFICATIONS, DIMENSIONS AND RATINGS COMPLY WITH AS/NZS 1299 ELECTRICAL EQUIPMENT FOR MINES AND QUARRIES.
4. SPECIAL FASTENERS COMPLY WITH ISO 262 WITH A TOLERANCE FIT 6g/6H AND THREAD ENGAGEMENT IS ≥ THE MAJOR DIAMETER AND THE CLEARANCE HOLE IS NOT > H13 (ISO 286–2).
5. ALL MACHINED FLAMEPATH SURFACES AVERAGE R_a DOES NOT EXCEED 6.3μm (ISO 468).
6. MATERIAL HIGH TENSILE BRASS C86500 TO AS 1565–1996 WITH A MINIMUM TENSILE STRENGTH 450 MPa AND MINIMUM 10% ELONGATION.
7. UTILUX CRIMP DIE'S TO BE USED FOR CONNECTION'S BETWEEN THIMBLES AND CABLES AS PER AS/NZS 4325 (IEC 1238) OR SOLDER.
8. TESTING ACCORDING TO IEC60079–0 USING MANDRELS REQUIRES A TIGHTENING TORQUE ON THE CABLE CLAMPING SCREWS OF 25Nm.
9. MINIMUM PROPERTY CLASS FOR STAINLESS STEEL FASTENERS IS A*–70.
10. MINIMUM PROPERTY CLASS FOR MILD STEEL FASTENERS IS 4.6.

THIS DRAWING REMAINS THE PROPERTY OF MINTO INDUSTRIAL PRODUCTS AND MUST NOT BE LENT OR COPIED.

PART No.
AF334S3 / AF334S4
AF334SS3 / AF334SS4

DO NOT SCALE DRAWING.
DIMENSIONS IN MILLIMETRES.

REVISION	DRAWING CREATED.	DATE	ZONE	REV.
		06/03 23.	–	A

cmi Electrical Products
A division of CMI Operations Pty Ltd

MINTO INDUSTRIAL PRODUCTS

GENERAL TOLERANCE ±0.5 UNLESS OTHERWISE SPECIFIED

MATERIAL SEE TABLE

FINISH R13 RED AS PER AS 2700

DESCRIPTION 300A 3300V RESTRAINED PLUG

SCALE NTS | DATE 22/11/2022 | A3 | DRAWING No. F-914

DRAWN EL | CHECKED PM | APPROVED

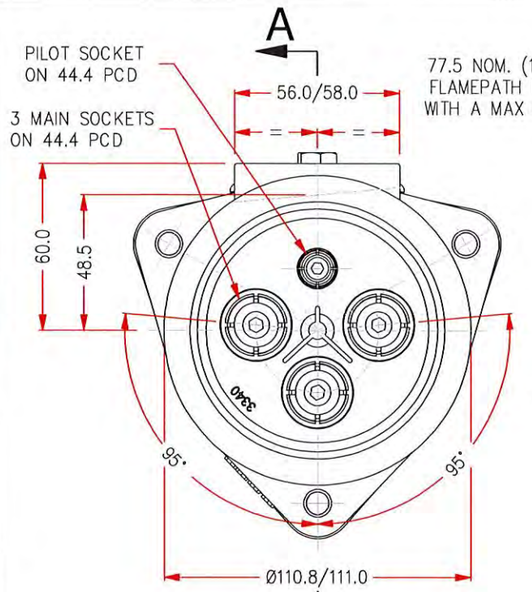

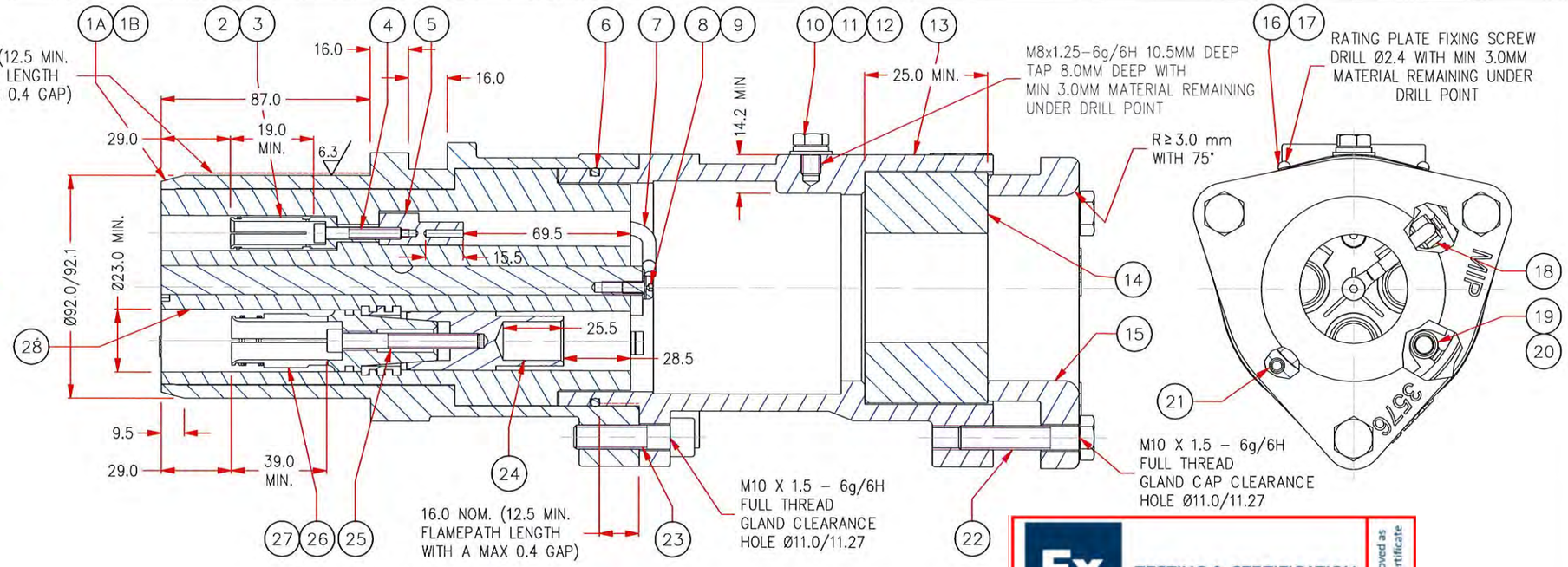

SEC TION A–A

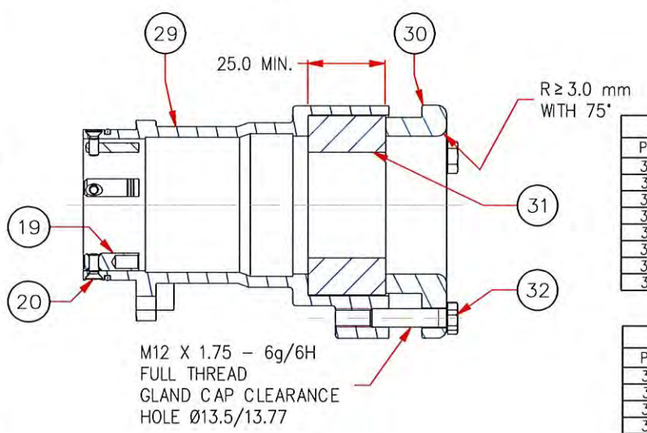

OPTIONAL LARGE GLAND ASSEMBLY

3054 SERIES GROMMETS			
PART No.	CABLE ACCEPTANCE	PART No.	CABLE ACCEPTANCE
3054–25	22.0–25.0	3054–54	50.0–54.0
3054–31	24.0–31.0	3054–57	53.0–57.0
3054–35	30.0–35.0	3054–60	56.0–60.0
3054–38	34.0–38.0	3054–64	59.0–64.0
3054–41	37.0–41.0	3054–67	63.0–67.0
3054–45	40.0–45.0	3054–70	66.0–70.0
3054–47	44.0–47.0	3054–73	69.0–73.0
3054–51	46.0–51.0	3054–76	72.0–76.0

3394 SERIES GROMMETS			
PART No.	CABLE ACCEPTANCE	PART No.	CABLE ACCEPTANCE
3394–58	53.0–58.0	3394–75	71.0–75.0
3394–61	56.0–61.0	3394–78	74.0–78.0
3394–63	59.0–63.0	3394–81	77.0–81.0
3394–66	62.0–66.0	3394–84	80.0–84.0
3394–69	65.0–69.0	3394–87	83.0–87.0
3394–72	68.0–72.0		

MARKING DETAILS

M.I.P.
AF3#4R@*
300A
# VOLTS 6=660V
1=1100V
@ NOSE CONE S=ST. STEEL
BLANK=BRONZE
* GLAND 3=SMALL
4=LARGE
IP66/68
Ex db I Mb
IECEx ExTC 22.0037X
ANZEx 22.4181
TYPE A
S.O. xxxxx–xx
WARNING
DO NOT SEPARATE WHEN ENERGIZED

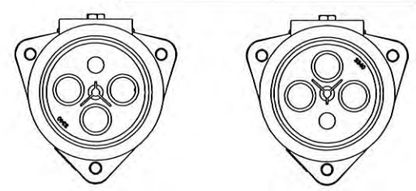

1100V
B24 BLUE

660V
X15 ORANGE

CONFIGURATION

TESTING & CERTIFICATION

IECEx ExTC 22.0037X-0

ANZEx 22.4181-0

This document is approved as specified in the listed certificate

ITEM	QTY	PART NUMBER	DESCRIPTION	MATERIAL
32	3	AH113135	M12 X 50 HEX HD SCREW	ST. STEEL
31	1	3394 SERIES	No. 4 CABLE GLAND GROMMET	NEOPRENE RUBBER
30	1	3399B	No. 4 GLAND CAP CASTING	HIGH TENSILE BRASS – NOTE 6 C86500 TO AS1565–1996
29	1	4246B	GLAND BODY CASTING (LARGE)	HIGH TENSILE BRASS – NOTE 6 C86500 TO AS1565–1996
28	1	3340	INTERIOR MOULDING	NEOPENE RUBBER
27	6	AH201362	CONTACT SPRING	ST. STEEL
26	3	201–299	MAIN CONTACT SOCKET	(COPPER) C14700 OR C11000 OR C10100 TO AS/NZS 1567–1997 SILVER PL. TO AS 1856–2004 CuAg 08
25	3	AH009868	1/4" UNC X 21/4" SKT HD SCREW	STEEL–ZINC PL.
24	3	3347 SERIES	MAIN THIMBLE	(COPPER) C14700 OR C11000 OR C10100 TO AS/NZS 1567–1997 SILVER PL. TO AS 1856–2004 CuAg 08
23	3	AH117113	M10 X 40 SKT HD SET SCREW (ISO4762)	ST. STEEL
22	3	AH113116S	M10 X 50 HEX HD SCREW (ISO4017)	ST. STEEL
21	1	AH002987	1/4" X 7/8" SELLOCK PIN	STEEL–ZINC PL.
20	4	AH151028	M6 X 16 CSK PHILLIPS HD SCREW	ST. STEEL
19	3	4648 SERIES	EARTH THIMBLE	(COPPER) C14700 OR C11000 OR C10100 TO AS/NZS 1567–1997
18	1	AH151032	M6 NYLOC NUT	STEEL–ZINC PL.
17	1	AX004076	RATING PLATE	BRASS
16	2	AH009788	No.4 GAUGE X 3/16" U–DRIVE SCREW	STEEL–ZINC PL.
15	1	3576B	No. 3 GLAND CAP CASTING	HIGH TENSILE BRASS – NOTE 6 C86500 TO AS1565–1996
14	1	3054 SERIES	No. 3 CABLE GLAND GROMMET	NEOPRENE RUBBER
13	1	3339B	GLAND BODY CASTING	HIGH TENSILE BRASS – NOTE 6 C86500 TO AS1565–1996
12	1	AH009277	5/16" X 5/8" X 18 WASHER	STEEL–ZINC PL.
11	1	AH009363	5/16" SQ SECT SPRING WASHER	STEEL–ZINC PL.
10	1	AH113091	M8 X 10 HEX HD SET SCREW	STEEL–ZINC PL.
9	1	AH009380	3/16" STAR WASHER	STEEL–ZINC PL.
8	1	AH117117	M5x10 BUTTON HD CAP SCREW	ST. STEEL
7	1	3191–2	6 mm² EARTH CONNECTOR	PVC INSUL. CABLE
6	1	AI019011	O'RING ID 91.67 X SECT 3.53	NITRILE
5	1	3589–1	PILOT THIMBLE	(COPPER) C14700 OR C11000 OR C10100 TO AS/NZS 1567–1997
4	1	AH009834	3/16" UNC X 11/4" SKT HD SCREW	ST. STEEL
3	1	3138–2	PILOT SOCKET	(COPPER) C14700 OR C11000 OR C10100 TO AS/NZS 1567–1997 SILVER PL. TO AS 1856–2004 CuAg 08
2	1	AH201405	CONTACT SOCKET SPRING	ST. STEEL
1B	1	3342B	BODY CASTING	HIGH TENSILE BRASS – NOTE 6 C86500 TO AS1565–1996
1A	1	3342SS	BODY CASTING	ST. STEEL 303 MIN. GRADE

Parts List

NOTES

1. MINIMUM WALL THICKNESS 3.0mm UNLESS OTHERWISE SPECIFIED ON THE DRAWING.
2. IN CASE OF BLIND HOLES FOR SCREWS, THE REMAINING THICKNESS OF MATERIAL UNDER THE HOLE IS A MINIMUM OF ONE–THIRD OF THE SCREW DIAMETER OR 3MM, WHICHEVER IS GREATER.
3. THE SPECIFICATIONS, DIMENSIONS AND RATINGS COMPLY WITH AS/NZS 1299 ELECTRICAL EQUIPMENT FOR MINES AND QUARRIES.
4. SPECIAL FASTENERS COMPLY WITH ISO 262 WITH A TOLERANCE FIT 6g/6H AND THREAD ENGAGEMENT IS ≥ THE MAJOR DIAMETER AND THE CLEARANCE HOLE IS NOT > H13 (ISO 286–2).
5. ALL MACHINED FLAMEPATH SURFACES AVERAGE R_a DOES NOT EXCEED 6.3μm (ISO 468).
6. MATERIAL HIGH TENSILE BRASS C86500 TO AS 1565–1996 WITH A MINIMUM TENSILE STRENGTH 450 MPa AND MINIMUM 10% ELONGATION.
7. UTILUX CRIMP DIE'S TO BE USED FOR CONNECTION'S BETWEEN THIMBLES AND CABLES AS PER AS/NZS 4325 (IEC 1238) OR SOLDER.
8. TESTING ACCORDING TO IEC60079–0 USING MANDRELS REQUIRES A TIGHTENING TORQUE ON THE CABLE CLAMPING SCREWS OF 25Nm.
9. MINIMUM PROPERTY CLASS FOR STAINLESS STEEL FASTENERS IS A*–70.
10. MINIMUM PROPERTY CLASS FOR MILD STEEL FASTENERS IS 4.6.

THIS DRAWING REMAINS THE PROPERTY OF MINTO INDUSTRIAL PRODUCTS AND MUST NOT BE LENT OR COPIED.

PART No.
AF314R3 / AF314R4
AF364R3 / AF364R4
AF314RS3 / AF314RS4
AF364RS3 / AF364RS4

DO NOT SCALE DRAWING.
DIMENSIONS IN MILLIMETRES.

REV.	ZONE	DATE	REVISION
A	–	06/03 '23.	DRAWING CREATED.

cmi Electrical Products
A division of CMI Operations Pty Ltd

MINTO INDUSTRIAL PRODUCTS

GENERAL TOLERANCE ±0.5 UNLESS OTHERWISE SPECIFIED

MATERIAL SEE TABLE

FINISH COLOUR CODING AS PER AS 2700

DESCRIPTION 300A 660/1100V RESTRAINED PLUG

SCALE NTS | DATE 22/11/2022 | A3 | DRAWING No. F-911

DRAWN EL | CHECKED PM | APPROVED

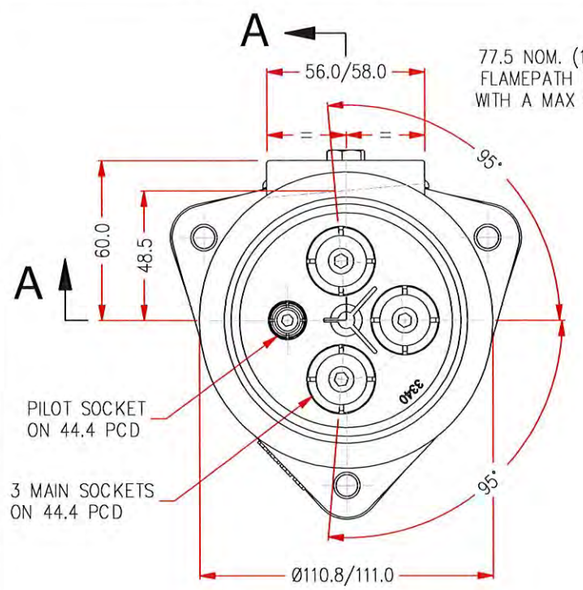

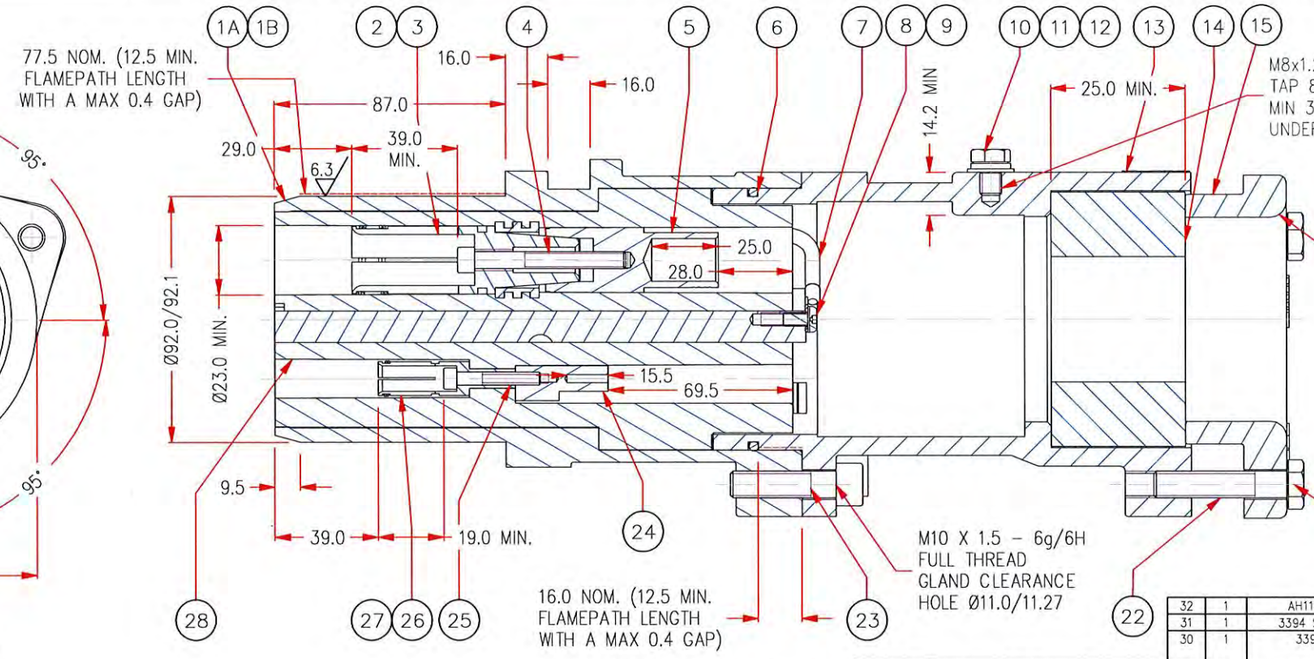

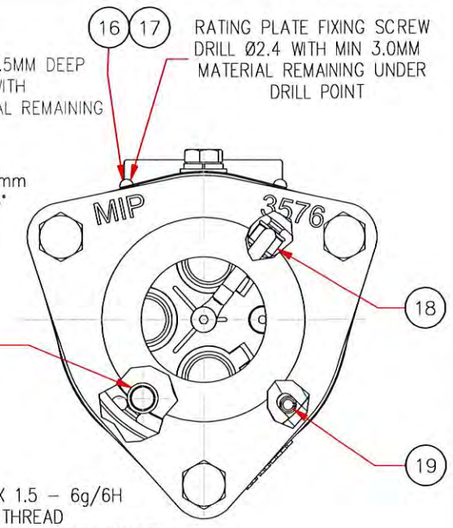

SECTION A-A

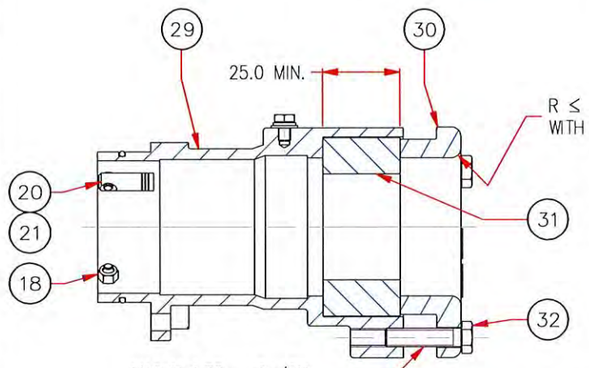

OPTIONAL LARGE GLAND ASSEMBLY

3054 SERIES GROMMETS			
PART No.	CABLE ACCEPTANCE	PART No.	CABLE ACCEPTANCE
3054-25	22.0-25.0	3054-54	50.0-54.0
3054-31	24.0-31.0	3054-57	53.0-57.0
3054-35	30.0-35.0	3054-60	56.0-60.0
3054-38	34.0-38.0	3054-64	59.0-64.0
3054-41	37.0-41.0	3054-67	63.0-67.0
3054-45	40.0-45.0	3054-70	66.0-70.0
3054-47	44.0-47.0	3054-73	69.0-73.0
3054-51	46.0-51.0	3054-76	72.0-76.0

3394 SERIES GROMMETS			
PART No.	CABLE ACCEPTANCE	PART No.	CABLE ACCEPTANCE
3394-58	53.0-58.0	3394-75	71.0-75.0
3394-61	56.0-61.0	3394-78	74.0-78.0
3394-63	59.0-63.0	3394-81	77.0-81.0
3394-66	62.0-66.0	3394-84	80.0-84.0
3394-69	65.0-69.0	3394-87	83.0-87.0
3394-72	68.0-72.0		

MARKING DETAILS

M.I.P.
AF4#4R@*
425A
# VOLTS 6=660V
1=1100V
@ NOSE CONE S=ST. STEEL
BLANK=BRONZE
* GLAND 3=SMALL
4=LARGE
IP66/68
Ex db I Mb
IECEx ExTC 22.0037X
ANZEx 22.4181
TYPE A
S.O xxxxx-xx
WARNING
DO NOT SEPARATE WHEN ENERGIZED

ITEM	QTY	PART NUMBER	DESCRIPTION	MATERIAL
32	1	AH113135	M12 X 50 HEX HD SET SCREW	ST. STEEL
31	1	3394 SERIES	No. 4 CABLE GLAND GROMMET	NEOPRENE RUBBER
30	1	3399B	No. 4 GLAND CAP CASTING	HIGH TENSILE BRASS - NOTE 6 C86500 TO AS 1565-1996
29	1	4246-3B	GLAND BODY CASTING (LARGE)	HIGH TENSILE BRASS - NOTE 6 C86500 TO AS 1565-1996
28	1	3340	INTERIOR MOULDING	NEOPRENE RUBBER
27	1	3138-3	PILOT SOCKET	(COPPER) C14700 OR C11000 OR C10100 TO AS/NZS 1567-1997 SILVER PL. TO AS 1856-2004 CuAg 08
26	1	AH201405	CONTACT SOCKET SPRING	ST. STEEL
25	1	AH009834	10-24 UNC X 11/4" SKT HD SCREW	ST. STEEL
24	1	3589-1	PILOT THIMBLE	(COPPER) C14700 OR C11000 OR C10100 TO AS/NZS 1567-1997
23	3	AH117113	M10 X 40 SKT HD SET SCREW (ISO4762)	ST. STEEL
22	3	AH113116S	M10 X 50 HEX HD SCREW (ISO4017)	ST. STEEL
21	4	AH151028	M6 X 16 CSK PHILLIPS HD SCREW	ST. STEEL
20	3	4648 SERIES	EARTH THIMBLE	(COPPER) C14700 OR C11000 OR C10100 TO AS/NZS 1567-1997
19	1	AH002987	1/4" X 7/8" SELLOCK PIN	STEEL-ZINC PL.
18	1	AH151032	M6 NYLOC NUT	STEEL-ZINC PL.
17	1	AX004076	RATING PLATE	BRASS
16	2	AH009788	No.4 GAUGE X 3/16" U-DRIVE SCREW	STEEL-ZINC PL.
15	1	3576B	No. 3 GLAND CAP CASTING	HIGH TENSILE BRASS - NOTE 6 C86500 TO AS 1565-1996
14	1	3054 SERIES	No. 3 CABLE GLAND GROMMET	NEOPRENE RUBBER
13	1	3339-3B	GLAND BODY CASTING	HIGH TENSILE BRASS - NOTE 6 C86500 TO AS 1565-1996
12	1	AH009277	5/16" X 5/8" X 18 WASHER	STEEL-ZINC PL.
11	1	AH009363	5/16" SQ SECT SPRING WASHER	STEEL-ZINC PL.
10	1	AH113091	M8 X 10 HEX HD SET SCREW	STEEL-ZINC PL.
9	1	AH009380	3/16" STAR WASHER	STEEL-ZINC PL.
8	1	AH117117	M5x10 BUTTON HD CAP SCREW	ST. STEEL
7	1	3191-2	6mm² EARTH CONNECTOR	PVC INSUL. CABLE
6	1	AI019011	O'RING ID 91.67 X SECT 3.53	NITRILE
5	3	3347 SERIES	MAIN THIMBLE	(COPPER) C14700 OR C11000 OR C10100 TO AS/NZS 1567-1997 SILVER PL. TO AS 1856-2004 CuAg 08
4	3	AH009868	1/4" UNC X 21/4" SKT HD SCREW	STEEL-ZINC PL.
3	3	201-300-1	MAIN SOCKET	(COPPER) C14700 OR C11000 OR C10100 TO AS/NZS 1567-1997 SILVER PL. TO AS 1856-2004 CuAg 08
2	6	AH201363	CONTACT SOCKET SPRING	ST. STEEL
1B	1	3342SS	PLUG BODY CASTING	ST. STEEL 303 MIN. GRADE
1A	1	3342B	PLUG BODY CASTING	HIGH TENSILE BRASS - NOTE 6 C86500 TO AS 1565-1996

Parts List

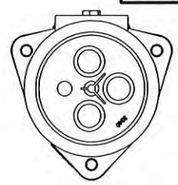

1100V
B24 BLUE/N24 SILVER
(N24 SILVER MIN. 25.0mm)

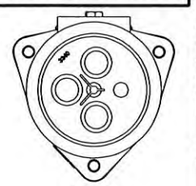

660V
X15 ORANGE/N24 SILVER
(N24 SILVER MIN. 25.0mm)

CONFIGURATION

Ex TESTING & CERTIFICATION

IECEx ExTC 22.0037X-0

ANZEx 22.4181-0

This document is approved as specified in the listed certificate

NOTES

1. MINIMUM WALL THICKNESS 3.0mm UNLESS OTHERWISE SPECIFIED ON THE DRAWING.
2. IN CASE OF BLIND HOLES FOR SCREWS, THE REMAINING THICKNESS OF MATERIAL UNDER THE HOLE IS A MINIMUM OF ONE-THIRD OF THE SCREW DIAMETER OR 3MM, WHICHEVER IS GREATER.
3. THE SPECIFICATIONS, DIMENSIONS AND RATINGS COMPLY WITH AS/NZS 1299 ELECTRICAL EQUIPMENT FOR MINES AND QUARRIES.
4. SPECIAL FASTENERS COMPLY WITH ISO 262 WITH A TOLERANCE FIT 6g/6H AND THREAD ENGAGEMENT IS ≥ THE MAJOR DIAMETER AND THE CLEARANCE HOLE IS NOT > H13 (ISO 286-2).
5. ALL MACHINED FLAMEPATH SURFACES AVERAGE R_a DOES NOT EXCEED 6.3µm (ISO 468).
6. MATERIAL HIGH TENSILE BRASS C86500 TO AS 1565-1996 WITH A MINIMUM TENSILE STRENGTH 450 MPa AND MINIMUM 10% ELONGATION.
7. UTILUX CRIMP DIE'S TO BE USED FOR CONNECTION'S BETWEEN THIMBLES AND CABLES AS PER AS/NZS 4325 (IEC 1238) OR SOLDER.
8. TESTING ACCORDING TO IEC60079-0 USING MANDRELS REQUIRES A TIGHTENING TORQUE ON THE CABLE CLAMPING SCREWS OF 25Nm.
9. MINIMUM PROPERTY CLASS FOR STAINLESS STEEL FASTENERS IS A*-70.
10. MINIMUM PROPERTY CLASS FOR MILD STEEL FASTENERS IS 4.6.

THIS DRAWING REMAINS THE PROPERTY OF MINTO INDUSTRIAL PRODUCTS AND MUST NOT BE LENT OR COPIED.

PART No.
AF414R3 / AF414R4
AF464R3 / AF464R4
AF414RS3 / AF414RS4
AF464RS3 / AF464RS4

DO NOT SCALE DRAWING.
DIMENSIONS IN MILLIMETRES.

REV.	ZONE	DATE	REVISION
A		06/03 '23.	DRAWING CREATED.

cmi Electrical Products
A division of CMI Operations Pty Ltd

MINTO INDUSTRIAL PRODUCTS

GENERAL TOLERANCE ±0.5
UNLESS OTHERWISE SPECIFIED

MATERIAL: SEE TABLE

FINISH: COLOUR CODED AS PER AS 2700

DESCRIPTION: 425A 660/1100V RESTRAINED PLUG

SCALE: NTS | DATE: 22/11/2022 | DRAWN: EL | CHECKED: PJD | APPROVED:

A3

DRAWING No. F-920

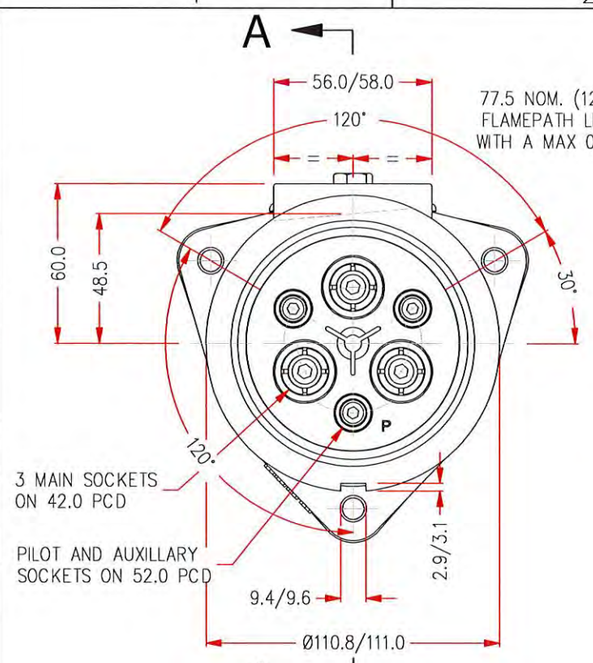

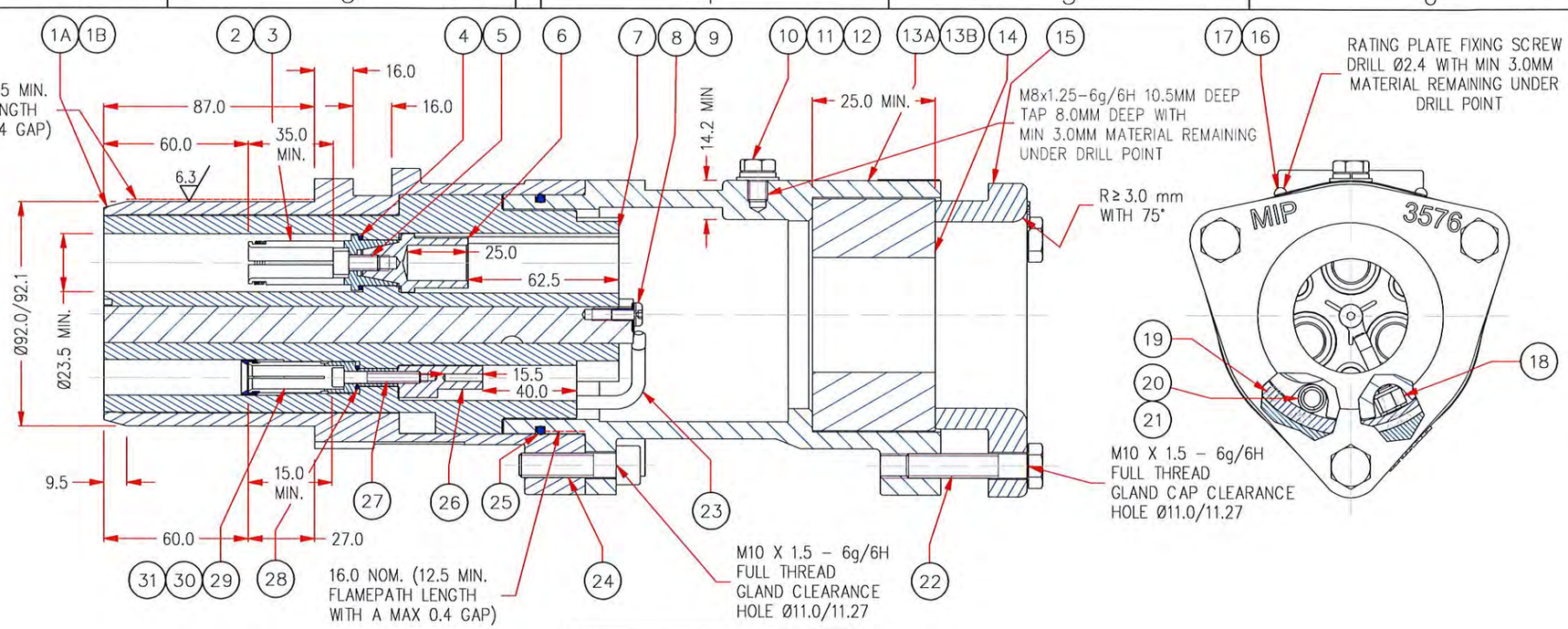

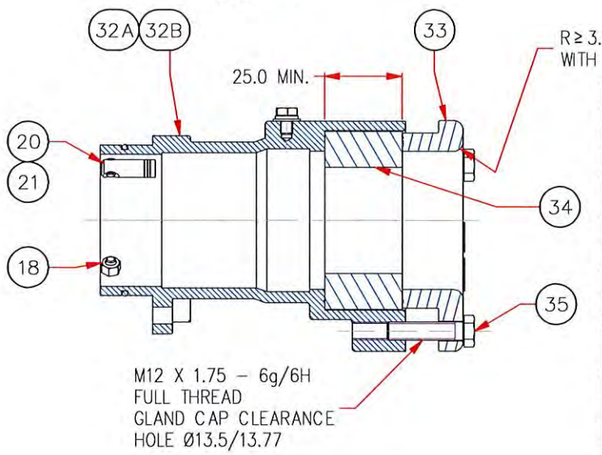

OPTIONAL LARGE GLAND ASSEMBLY

SECTION A–A

3054 SERIES GROMMETS			
PART No.	CABLE ACCEPTANCE	PART No.	CABLE ACCEPTANCE
3054–25	22.0–25.0	3054–54	50.0–54.0
3054–31	24.0–31.0	3054–57	53.0–57.0
3054–35	30.0–35.0	3054–60	56.0–60.0
3054–38	34.0–38.0	3054–64	59.0–64.0
3054–41	37.0–41.0	3054–67	63.0–67.0
3054–45	40.0–45.0	3054–70	66.0–70.0
3054–47	44.0–47.0	3054–73	69.0–73.0
3054–51	46.0–51.0	3054–76	72.0–76.0

3394 SERIES GROMMETS			
PART No.	CABLE ACCEPTANCE	PART No.	CABLE ACCEPTANCE
3394–58	53.0–58.0	3394–75	71.0–75.0
3394–61	56.0–61.0	3394–78	74.0–78.0
3394–63	59.0–63.0	3394–81	77.0–81.0
3394–66	62.0–66.0	3394–84	80.0–84.0
3394–69	65.0–69.0	3394–87	83.0–87.0
3394–72	68.0–72.0		

MARKING DETAILS

M.I.P.
AF3#6R@*
300A
# VOLTS 1=1100V
3=3300V
@ NOSE CONE S=ST. STEEL
BLANK=BRONZE
* GLAND 3=SMALL
4=LARGE
IP66/68
Ex db I Mb
IECEx ExTC 22.0037X
ANZEx 22.4181
TYPE A
S.O xxxxx–xx
WARNING
DO NOT SEPARATE WHEN ENERGIZED

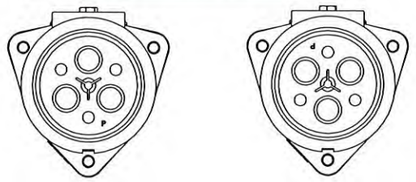

3300V
R13 RED

1100V
B24 BLUE

CONFIGURATION

ITEM	QTY	PART NUMBER	DESCRIPTION	MATERIAL
35	3	AH113135	M12 X 50 HEX HD SCREW	ST. STEEL
34	1	3394 SERIES	No. 4 CABLE GLAND GROMMET	NEOPRENE RUBBER
33	1	3399B	No. 4 GLAND CAP CASTING	HIGH TENSILE BRASS – NOTE 6 C86500 TO AS 1565–1996
32B	1	4246–4B	3300V GLAND BODY CASTING (LARGE)	HIGH TENSILE BRASS – NOTE 6 C86500 TO AS 1565–1996
32A	1	4246–5B	1100V GLAND BODY CASTING (LARGE)	HIGH TENSILE BRASS – NOTE 6 C86500 TO AS 1565–1996
31	3	4536	PILOT SOCKET RETAINING RING (OPTIONAL)	ERTACETAL C
30	3	AH201405	CONTACT SOCKET SPRING	ST. STEEL
29	3	3138–2	PILOT SOCKET	(COPPER) C14700 OR C11000 OR C10100 TO AS/NZS 1567–1997 SILVER PL. TO AS 1856–2004 CuAg 08
28	3	AI019030	O'RING ID 6.07 X SECT 1.78	NITRILE
27	3	AH009834	10–24 UNC X 11/4" SKT HD SCREW	ST. STEEL
26	3	3589–1	PILOT THIMBLE	(COPPER) C14700 OR C11000 OR C10100 TO AS/NZS 1567–1997
25	1	AI019011	O'RING ID 91.67 X SECT 3.53	NITRILE
24	3	AH117113	M10 X 40 SKT HD SET SCREW (ISO4762)	ST. STEEL
23	1	3191–2	6mm² EARTH CONNECTOR	PVC INSUL. CABLE
22	3	AH113165	M10 X 50 HEX HD SCREW (ISO4017)	ST. STEEL
21	4	AH151028	M6 X 16 CSK PHILLIPS HD SCREW	ST. STEEL
20	3	4648 SERIES	EARTH THIMBLE	(COPPER) C14700 OR C11000 OR C10100 TO AS/NZS 1567–1997
19	1	AH002987	1/4" X 7/8" SELLOCK PIN	STEEL–ZINC PL.
18	1	AH151032	M6 NYLOC NUT	STEEL–ZINC PL.
17	1	AX004076	RATING PLATE	BRASS
16	2	AH009788	No.4 GAUGE X 3/16" U–DRIVE SCREW	STEEL–ZINC PL.
15	1	3576B	No. 3 GLAND CAP CASTING	HIGH TENSILE BRASS – NOTE 6 C86500 TO AS 1565–1996
14	1	3054 SERIES	No. 3 CABLE GLAND GROMMET	NEOPRENE RUBBER
13B	1	3339–4B	3300V GLAND BODY CASTING	HIGH TENSILE BRASS – NOTE 6 C86500 TO AS 1565–1996
13A	1	3339–5B	1100V GLAND BODY CASTING	HIGH TENSILE BRASS – NOTE 6 C86500 TO AS 1565–1996
12	1	AH009277	5/16" X 5/8" X 18 WASHER	STEEL–ZINC PL.
11	1	AH009363	5/16" SQ SECT SPRING WASHER	STEEL–ZINC PL.
10	1	AH113091	M8 X 10 HEX HD SET SCREW	STEEL–ZINC PL.
9	1	AH009380	3/16" STAR WASHER	STEEL–ZINC PL.
8	1	AH117117	M5x10 BUTTON HD CAP SCREW	ST. STEEL
7	1	4034	INTERIOR MOULDING	SUPEROHM
6	3	3962 SERIES	MAIN THIMBLE	(COPPER) C14700 OR C11000 OR C10100 TO AS/NZS 1567–1997 SILVER PL. TO AS 1856–2004 CuAg 08
5	3	AH009857	1/4" UNC X 1/2" SKT HD SCREW	ST. STEEL
4	3	AI019032	O'RING ID 18.77 X SECT 1.78	NITRILE
3	3	3961	MAIN SOCKET	(COPPER) C14700 OR C11000 OR C10100 TO AS/NZS 1567–1997 SILVER PL. TO AS 1856–2004 CuAg 08
2	6	AH201361	CONTACT SOCKET SPRING	ST. STEEL
1B	1	3342–5B	PLUG BODY CASTING	HIGH TENSILE BRASS – NOTE 6 C86500 TO AS 1565–1996
1A	1	3342–5SS	PLUG BODY CASTING	ST. STEEL 303 MIN. GRADE

Parts List

NOTES

1. MINIMUM WALL THICKNESS 3.0mm UNLESS OTHERWISE SPECIFIED ON THE DRAWING.
2. IN CASE OF BLIND HOLES FOR SCREWS, THE REMAINING THICKNESS OF MATERIAL UNDER THE HOLE IS A MINIMUM OF ONE–THIRD OF THE SCREW DIAMETER OR 3MM, WHICHEVER IS GREATER.
3. THE SPECIFICATIONS, DIMENSIONS AND RATINGS COMPLY WITH AS/NZS 1299 ELECTRICAL EQUIPMENT FOR MINES AND QUARRIES.
4. SPECIAL FASTENERS COMPLY WITH ISO 262 WITH A TOLERANCE FIT 6g/6H AND THREAD ENGAGEMENT IS ≥ THE MAJOR DIAMETER AND THE CLEARANCE HOLE IS NOT > H13 (ISO 286–2).
5. ALL MACHINED FLAMEPATH SURFACES AVERAGE R_a DOES NOT EXCEED 6.3μm (ISO 468).
6. MATERIAL HIGH TENSILE BRASS C86500 TO AS 1565–1996 WITH A MINIMUM TENSILE STRENGTH 450 MPa AND MINIMUM 10% ELONGATION.
7. UTILUX CRIMP DIE'S TO BE USED FOR CONNECTION'S BETWEEN THIMBLES AND CABLES AS PER AS/NZS 4325 (IEC 1238) OR SOLDER.
8. TESTING ACCORDING TO IEC60079–0 USING MANDRELS REQUIRES A TIGHTENING TORQUE ON THE CABLE CLAMPING SCREWS OF 25Nm.
9. MINIMUM PROPERTY CLASS FOR STAINLESS STEEL FASTENERS IS A*–70.
10. MINIMUM PROPERTY CLASS FOR MILD STEEL FASTENERS IS 4.6.

Ex TESTING & CERTIFICATION

IECEx ExTC 22.0037X-0

ANZEx 22.4181-0

This document is approved as specified in the listed certificate

THIS DRAWING REMAINS THE PROPERTY OF MINTO INDUSTRIAL PRODUCTS AND MUST NOT BE LENT OR COPIED.

PART No.
AF316R3 / AF316R4
AF336R3 / AF336R4
AF316RS3 / AF316RS4
AF336RS3 / AF336RS4

DO NOT SCALE DRAWING.
DIMENSIONS IN MILLIMETRES.

DRAWING CREATED.	DATE	ZONE	REV.
	06/03 '23.	–	A

REVISION

cmi Electrical Products
A division of CMI Operations Pty Ltd

MINTO INDUSTRIAL PRODUCTS

GENERAL TOLERANCE ±0.5
UNLESS OTHERWISE SPECIFIED

MATERIAL SEE TABLE

FINISH COLOUR CODING AS PER AS 2700

DESCRIPTION 300A 1100/3300V 6P RESTRAINED PLUG

SCALE NTS | DATE 22/11/2022 | DRAWN EL | CHECKED | APPROVED | A3

DRAWING No. F-929

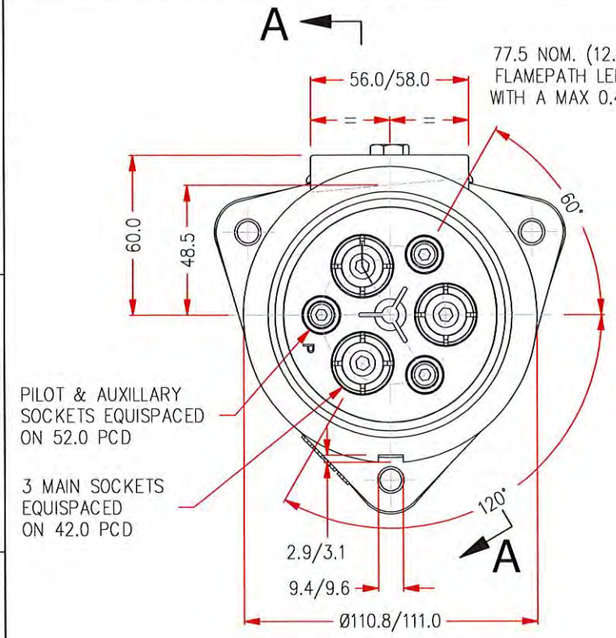

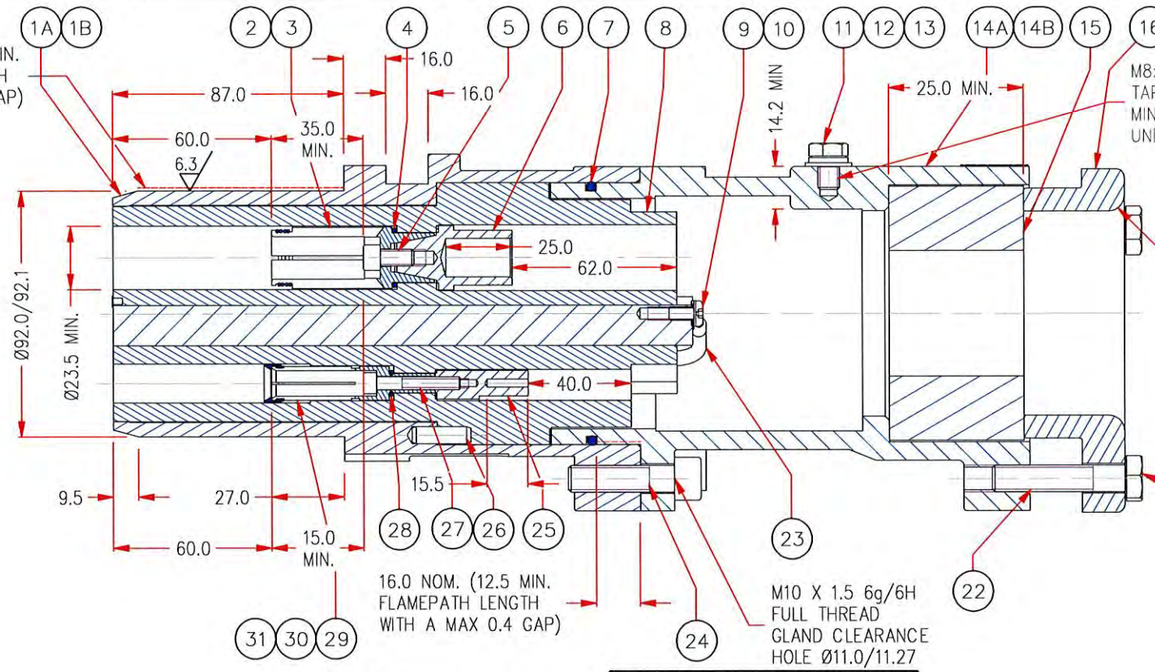

SECTION A–A

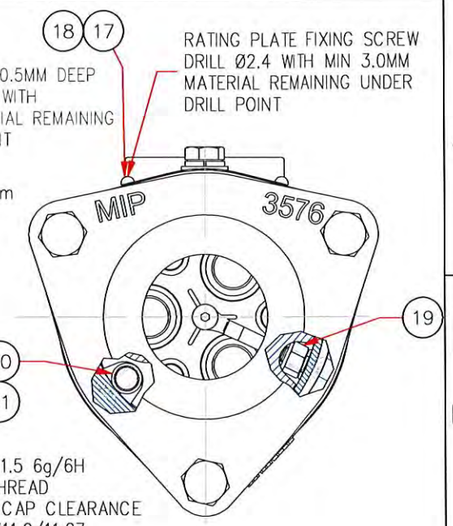

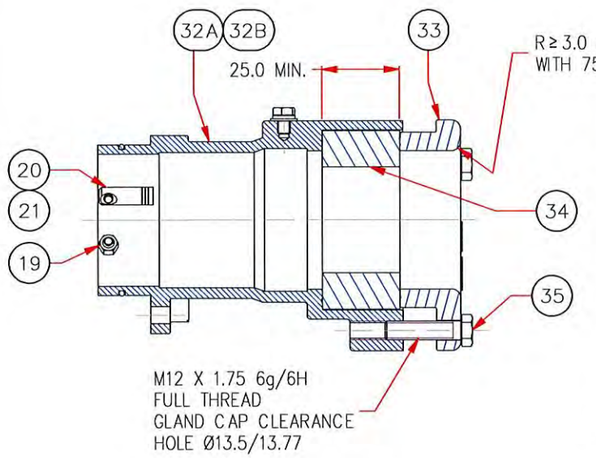

OPTIONAL LARGE GLAND ASSEMBLY

3054 SERIES GROMMETS			
PART No.	CABLE ACCEPTANCE	PART No.	CABLE ACCEPTANCE
3054-25	22.0-25.0	3054-54	50.0-54.0
3054-31	24.0-31.0	3054-57	53.0-57.0
3054-35	30.0-35.0	3054-60	56.0-60.0
3054-38	34.0-38.0	3054-64	59.0-64.0
3054-41	37.0-41.0	3054-67	63.0-67.0
3054-45	40.0-45.0	3054-70	66.0-70.0
3054-47	44.0-47.0	3054-73	69.0-73.0
3054-51	46.0-51.0	3054-76	72.0-76.0

3394 SERIES GROMMETS			
PART No.	CABLE ACCEPTANCE	PART No.	CABLE ACCEPTANCE
3394-58	53.0-58.0	3394-75	71.0-75.0
3394-61	56.0-61.0	3394-78	74.0-78.0
3394-63	59.0-63.0	3394-81	77.0-81.0
3394-66	62.0-66.0	3394-84	80.0-84.0
3394-69	65.0-69.0	3394-87	83.0-87.0
3394-72	68.0-72.0		

MARKING DETAILS

M.I.P.
AF4#6R@*
425A
# VOLTS 1=1100V
3=3300V
@ NOSE CONE S=ST. STEEL
BLANK=BRONZE
* GLAND 3=SMALL
4=LARGE
IP66/68
Ex db I Mb
IECEx ExTC 22.0037X
ANZEx 22.4181
TYPE A
S.O xxxxx-xx
WARNING
DO NOT SEPARATE WHEN ENERGIZED

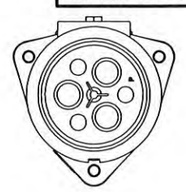

1100V
B24 BLUE/N24 SILVER
(N24 SILVER MIN. 25.0mm)

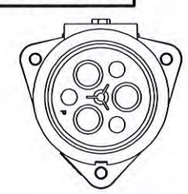

3300V
R13 RED/N24 SILVER
(N24 SILVER MIN. 25.0mm)

CONFIGURATION

Parts List				
ITEM	QTY	PART NUMBER	DESCRIPTION	MATERIAL
35	1	AH113135	M12 X 50 HEX HD SCREW	ST. STEEL
34	1	3394 SERIES	No. 4 CABLE GLAND GROMMET	NEOPRENE RUBBER
33	1	3399B	No. 4 GLAND CAP CASTING	HIGH TENSILE BRASS – NOTE 6 C86500 TO AS 1565-1996
32B	1	4246-7B	1100V GLAND BODY CASTING	HIGH TENSILE BRASS – NOTE 6 C86500 TO AS 1565-1996
32A	1	4246-6B	3300V GLAND BODY CASTING	HIGH TENSILE BRASS – NOTE 6 C86500 TO AS 1565-1996
31	3	4536	PILOT SOCKET RETAINING RING (OPTIONAL)	ERTACETAL C
30	3	AH201405	CONTACT SOCKET SPRING	ST. STEEL
29	3	3138-2	PILOT SOCKET	(COPPER) C14700 OR C11000 OR C10100 TO AS/NZS 1567-1997 SILVER PL. TO AS 1856-2004 CuAg 08
28	3	AI019030	O'RING ID 6.07 X SECT 1.78	NITRILE
27	3	AH009834	10-24 UNC X 11/4" SKT HD SCREW	ST. STEEL
26	1	AH002987	1/4" X 7/8" SELLOCK PIN	STEEL-ZINC PL.
25	3	3589-1	PILOT THIMBLE	(COPPER) C14700 OR C11000 OR C10100 TO AS/NZS 1567-1997
24	3	AH117113	M10 X 40 SKT HD SET SCREW (ISO4762)	ST. STEEL
23	1	3191-2	6mm² EARTH CONNECTOR	PVC INSUL. CABLE
22	3	AH113116S	M10 X 50 HEX HD SCREW (ISO4017)	ST. STEEL
21	4	AH151028	M6 X 16 CSK PHILLIPS HD SCREW	ST. STEEL
20	3	464B SERIES	EARTH THIMBLE	(COPPER) C14700 OR C11000 OR C10100 TO AS/NZS 1567-1997
19	1	AH151032	M6 NYLOC NUT	STEEL-ZINC PL.
18	1	AX004076	RATING PLATE	BRASS
17	2	AH009788	No.4 GAUGE X 3/16" U-DRIVE SCREW	STEEL-ZINC PL.
16	1	3576B	No. 3 GLAND CAP CASTING	HIGH TENSILE BRASS – NOTE 6 C86500 TO AS 1565-1996
15	1	3054 SERIES	No. 3 CABLE GLAND GROMMET	NEOPRENE RUBBER
14B	1	3339-7B	1100V GLAND BODY CASTING	HIGH TENSILE BRASS – NOTE 6 C86500 TO AS 1565-1996
14A	1	3339-6B	3300V GLAND BODY CASTING	HIGH TENSILE BRASS – NOTE 6 C86500 TO AS 1565-1996
13	1	AH009277	5/16" X 5/8" X 1B WASHER	STEEL-ZINC PL.
12	1	AH009363	5/16" SQ SECT SPRING WASHER	STEEL-ZINC PL.
11	1	AH113091	M8 X 10 HEX HD SET SCREW	STEEL-ZINC PL.
10	1	AH009380	3/16" STAR WASHER	STEEL-ZINC PL.
9	1	AH117117	M5x10 BUTTON HD CAP SCREW	ST. STEEL
8	1	4034	INTERIOR MOULDING	SUPEROHM
7	1	AI019011	O'RING ID 91.67 X SECT 3.53	NITRILE
6	3	3962 SERIES	MAIN THIMBLE	(COPPER) C14700 OR C11000 OR C10100 TO AS/NZS 1567-1997 SILVER PL. TO AS 1856-2004 CuAg 08
5	3	AH009857	1/4" UNC X 1/2" SKT HD SCREW	ST. STEEL
4	3	AI019032	O'RING ID 18.77 X SECT 1.78	NITRILE
3	3	4245	MAIN SOCKET	(COPPER) C14700 OR C11000 OR C10100 TO AS/NZS 1567-1997 SILVER PL. TO AS 1856-2004 CuAg 08
2	6	AH201432	CONTACT SOCKET SPRING	ST. STEEL
1B	1	3342-5SS	PLUG BODY CASTING	ST. STEEL 303 MIN. GRADE
1A	1	3342-5B	PLUG BODY CASTING	HIGH TENSILE BRASS – NOTE 6 C86500 TO AS 1565-1996

NOTES

1. MINIMUM WALL THICKNESS 3.0mm UNLESS OTHERWISE SPECIFIED ON THE DRAWING.
2. IN CASE OF BLIND HOLES FOR SCREWS, THE REMAINING THICKNESS OF MATERIAL UNDER THE HOLE IS A MINIMUM OF ONE-THIRD OF THE SCREW DIAMETER OR 3MM, WHICHEVER IS GREATER.
3. THE SPECIFICATIONS, DIMENSIONS AND RATINGS COMPLY WITH AS/NZS 1299 ELECTRICAL EQUIPMENT FOR MINES AND QUARRIES.
4. SPECIAL FASTENERS COMPLY WITH ISO 262 WITH A TOLERANCE FIT 6g/6H AND THREAD ENGAGEMENT IS ≥ THE MAJOR DIAMETER AND THE CLEARANCE HOLE IS NOT > H13 (ISO 286-2).
5. ALL MACHINED FLAMEPATH SURFACES AVERAGE R_a DOES NOT EXCEED 6.3μm (ISO 468).
6. MATERIAL HIGH TENSILE BRASS C86500 TO AS 1565-1996 WITH A MINIMUM TENSILE STRENGTH 450 MPa AND MINIMUM 10% ELONGATION.
7. UTILUX CRIMP DIE'S TO BE USED FOR CONNECTION'S BETWEEN THIMBLES AND CABLES AS PER AS/NZS 4325 (IEC 1238) OR SOLDER.
8. TESTING ACCORDING TO IEC60079-0 USING MANDRELS REQUIRES A TIGHTENING TORQUE ON THE CABLE CLAMPING SCREWS OF 25Nm.
9. MINIMUM PROPERTY CLASS FOR STAINLESS STEEL FASTENERS IS A*-70.
10. MINIMUM PROPERTY CLASS FOR MILD STEEL FASTENERS IS 4.6.

Ex TESTING & CERTIFICATION
IECEx ExTC 22.0037X-0
ANZEx 22.4181-0
This document is approved as specified in the listed certificate

THIS DRAWING REMAINS THE PROPERTY OF MINTO INDUSTRIAL PRODUCTS AND MUST NOT BE LENT OR COPIED.

PART No.
AF416R3 / AF416R4
AF436R3 / AF436R4
AF416RS3 / AF416RS4
AF436RS3 / AF436RS4

DO NOT SCALE DRAWING. DIMENSIONS IN MILLIMETRES.

REV.	ZONE	DATE	REVISION
A	-	06/03 23.	DRAWING CREATED

cmi Electrical Products
A division of CMI Operations Pty Ltd

MINTO INDUSTRIAL PRODUCTS

GENERAL TOLERANCE ±0.5 UNLESS OTHERWISE SPECIFIED
MATERIAL SEE TABLE
FINISH COLOUR CODED AS PER AS 2700

DESCRIPTION 425A 1100/3300V 6P RESTRAINED PLUG

SCALE NTS | DATE 22/11/2022 | A3 | DRAWING No. F-941
DRAWN AB | CHECKED | APPROVED

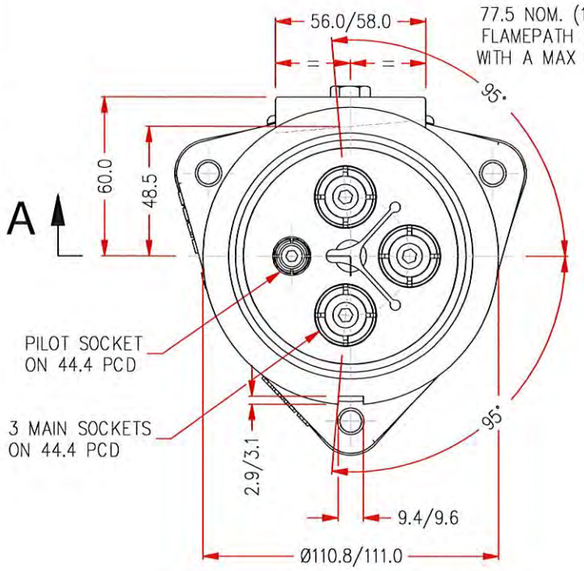

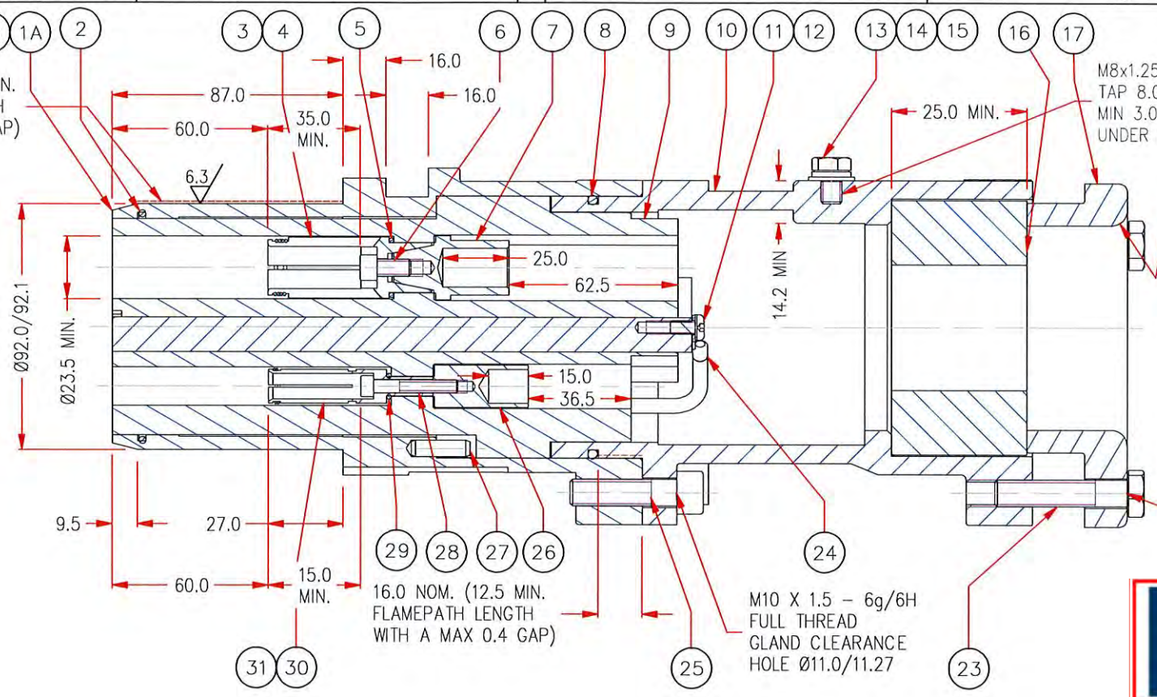

SECTION A–A

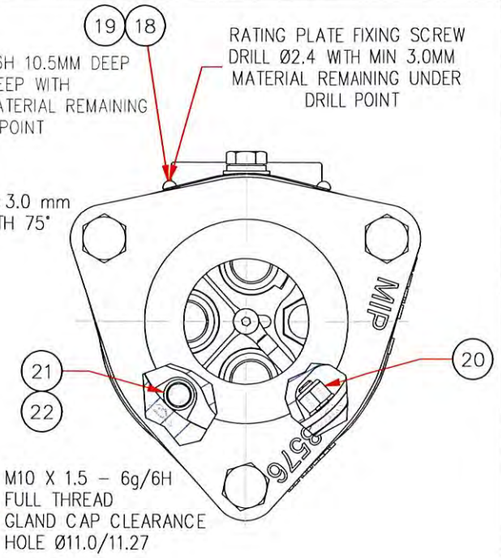

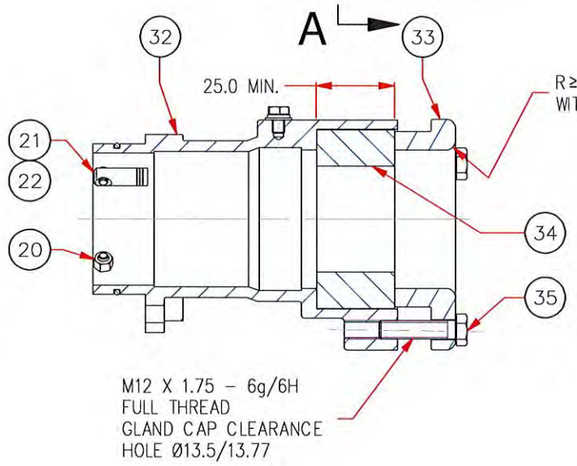

OPTIONAL LARGE GLAND ASSEMBLY

3054 SERIES GROMMETS			
PART No.	CABLE ACCEPTANCE	PART No.	CABLE ACCEPTANCE
3054-25	22.0-25.0	3054-54	50.0-54.0
3054-31	24.0-31.0	3054-57	53.0-57.0
3054-35	30.0-35.0	3054-60	56.0-60.0
3054-38	34.0-38.0	3054-64	59.0-64.0
3054-41	37.0-41.0	3054-67	63.0-67.0
3054-45	40.0-45.0	3054-70	66.0-70.0
3054-47	44.0-47.0	3054-73	69.0-73.0
3054-51	46.0-51.0	3054-76	72.0-76.0

3394 SERIES GROMMETS			
PART No.	CABLE ACCEPTANCE	PART No.	CABLE ACCEPTANCE
3394-58	53.0-58.0	3394-75	71.0-75.0
3394-61	56.0-61.0	3394-78	74.0-78.0
3394-63	59.0-63.0	3394-81	77.0-81.0
3394-66	62.0-66.0	3394-84	80.0-84.0
3394-69	65.0-69.0	3394-87	83.0-87.0
3394-72	68.0-72.0		

MARKING DETAILS

M.I.P.
AF434S@*
425A
3300V
@ NOSE CONE S=ST. STEEL
BLANK=BRONZE
* GLAND 3=SMALL
4=LARGE
IP66/68
Ex db I Mb
IECEx ExTC 22.0037X
ANZEx 22.4181
TYPE A
S.O xxxxx-xx
WARNING
DO NOT SEPARATE WHEN ENERGIZED

NOTES

1. MINIMUM WALL THICKNESS 3.0mm UNLESS OTHERWISE SPECIFIED ON THE DRAWING.
2. IN CASE OF BLIND HOLES FOR SCREWS, THE REMAINING THICKNESS OF MATERIAL UNDER THE HOLE IS A MINIMUM OF ONE-THIRD OF THE SCREW DIAMETER OR 3MM, WHICHEVER IS GREATER.
3. THE SPECIFICATIONS, DIMENSIONS AND RATINGS COMPLY WITH AS/NZS 1299 ELECTRICAL EQUIPMENT FOR MINES AND QUARRIES.
4. SPECIAL FASTENERS COMPLY WITH ISO 262 WITH A TOLERANCE FIT 6g/6H AND THREAD ENGAGEMENT IS ≥ THE MAJOR DIAMETER AND THE CLEARANCE HOLE IS NOT > H13 (ISO 286-2).
5. ALL MACHINED FLAMEPATH SURFACES AVERAGE R_a DOES NOT EXCEED 6.3µm (ISO 468).
6. MATERIAL HIGH TENSILE BRASS C86500 TO AS 1565-1996 WITH A MINIMUM TENSILE STRENGTH 450 MPa AND MINIMUM 10% ELONGATION.
7. UTILUX CRIMP DIE'S TO BE USED FOR CONNECTION'S BETWEEN THIMBLES AND CABLES AS PER AS/NZS 4325 (IEC 1238) OR SOLDER.
8. TESTING ACCORDING TO IEC60079-0 USING MANDRELS REQUIRES A TIGHTENING TORQUE ON THE CABLE CLAMPING SCREWS OF 25Nm.
9. MINIMUM PROPERTY CLASS FOR STAINLESS STEEL FASTENERS IS A*-70.
10. MINIMUM PROPERTY CLASS FOR MILD STEEL FASTENERS IS 4.6.

Ex TESTING & CERTIFICATION

IECEx ExTC 22.0037X-0

ANZEx 22.4181-0

This document is approved as specified in the listed certificate

ITEM	QTY	PART NUMBER	DESCRIPTION	MATERIAL
35	3	AH113135	M12 X 40 HEX HD SCREW	ST. STEEL
34	1	3394 SERIES	No. 4 CABLE GLAND GROMMET	NEOPRENE RUBBER
33	1	3399B	No. 4 GLAND CAP CASTING	HIGH TENSILE BRASS - NOTE 6 C86500 TO AS 1565-1996
32	1	4246-BB	GLAND BODY CASTING (LARGE)	HIGH TENSILE BRASS - NOTE 6 C86500 TO AS 1565-1996
31	1	AH201405	CONTACT SOCKET SPRING	ST. STEEL
30	1	3138-2	PILOT SOCKET	(COPPER) C14700 OR C11000 OR C10100 TO AS/NZS 1567-1997 SILVER PL. TO AS 1856-2004 CuAg 08
29	1	AI019030	O'RING ID 6.07 X SECT 1.78	NITRILE
28	1	AH009834	10-24 UNC X 11/4" SKT HD SCREW	ST. STEEL
27	1	AH002987	1/4" X 7/8" SELLOCK PIN	STEEL-ZINC PL.
26	1	3984	PILOT THIMBLE	(COPPER) C14700 OR C11000 OR C10100 TO AS/NZS 1567-1997
25	3	AH117113	M10 X 40 SKT HD SET SCREW (ISO4762)	ST. STEEL
24	1	3191-2	6.0mm² EARTH CONNECTOR	PVC INSUL. CABLE
23	3	AH113165	M10 X 50 HEX HD SCREW (ISO4017)	ST. STEEL
22	4	AH151028	M6 X 16 CSK PHILLIPS HD SCREW	ST. STEEL
21	3	4648 SERIES	EARTH THIMBLE	(COPPER) C14700 OR C11000 OR C10100 TO AS/NZS 1567-1997
20	1	AH151032	M6 NYLOC NUT	STEEL-ZINC PL.
19	1	AX004076	RATING PLATE	BRASS
18	2	AH009788	No.4 GAUGE X 3/16" U-DRIVE SCREW	STEEL-ZINC PL.
17	1	3576B	No. 3 GLAND CAP CASTING	HIGH TENSILE BRASS - NOTE 6 C86500 TO AS 1565-1996
16	1	3054 SERIES	No. 3 CABLE GLAND GROMMET	NEOPRENE RUBBER
15	1	AH009277	5/16" X 5/8" X 18 WASHER	STEEL-ZINC PL.
14	1	AH009363	5/16" SQ SECT SPRING WASHER	STEEL-ZINC PL.
13	1	AH113091	M8 X 10 HEX HD SET SCREW	STEEL-ZINC PL.
12	1	AH009380	3/16" STAR WASHER	STEEL-ZINC PL.
11	1	AH117117	M5x10 BUTTON HD CAP SCREW	ST. STEEL
10	1	3339-BB	GLAND BODY CASTING	HIGH TENSILE BRASS - NOTE 6 C86500 TO AS 1565-1996
9	1	3960	INTERIOR MOULDING	DMC 6804 G7B
8	1	AI019011	O'RING ID 91.67 X SECT 3.53	NITRILE
7	3	3962 SERIES	MAIN THIMBLE	(COPPER) C14700 OR C11000 OR C10100 TO AS/NZS 1567-1997 SILVER PL. TO AS 1856-2004 CuAg 08
6	3	AH009857	1/4" UNC X 1/2" SKT HD SCREW	ST. STEEL
5	3	AI019032	O'RING ID 18.77 X SECT 1.78	NITRILE
4	3	4245	MAIN SOCKET	(COPPER) C14700 OR C11000 OR C10100 TO AS/NZS 1567-1997 SILVER PL. TO AS 1856-2004 CuAg 08
3	6	AH201432	CONTACT SOCKET SPRING	ST. STEEL
2	1	AI019023	O'RING ID 82.22 X SECT 2.62	NITRILE
1B	1	3342-1SS	PLUG BODY CASTING	ST. STEEL 303 MIN. GRADE
1A	1	3342-1B	PLUG BODY CASTING	HIGH TENSILE BRASS - NOTE 6 C86500 TO AS 1565-1996

Parts List

REV.	ZONE	DATE	REVISION
A		06/03/23.	DRAWING CREATED

cmi Electrical Products
A division of CMI Operations Pty Ltd

MINTO INDUSTRIAL PRODUCTS

GENERAL TOLERANCE ±0.5
UNLESS OTHERWISE SPECIFIED

MATERIAL: SEE TABLE

FINISH: R13 RED/N24 SILVER (N24 SILVER MIN. 25.0mm) AS PER AS 2700

DESCRIPTION: 425A 3300V RESTRAINED PLUG

SCALE: NTS | DATE: 22/11/2022 | A3 | DRAWING No. F-945

DRAWN: AB | CHECKED: CM | APPROVED: 7/11

THIS DRAWING REMAINS THE PROPERTY OF MINTO INDUSTRIAL PRODUCTS AND MUST NOT BE LENT OR COPIED.

PART No.
AF434S3 / AF434S4
AF434SS3 / AF434SS4

DO NOT SCALE DRAWING.
DIMENSIONS IN MILLIMETRES

300/425A PLUGS

F-3962 RANGE - MAIN PHASE THIMBLE
300/425A 4 PIN 3300V SOLID INTERIOR PRODUCTS
300/425A 6 PIN 1100/3300V RUBBER INTERIOR PRODUCTS

PART No.	I.D.	UTILUX DIE No.	INSERTION DEPTH
F-3962-1	10.0	38-115 Cu	25 MIN
F-3962-2	11.0	38-115 Cu	25 MIN
F-3962-3	13.5	38-142 Cu	25 MIN
F-3962-4	14.5	38-165 Cu	25 MIN
F-3962-5	16.6	38-165 Cu	25 MIN
F-3962-6	18.0	38-183 Cu	25 MIN
F-3962-7	20.7	SOLDER ONLY	25 MIN

F-3838 RANGE - MAIN PHASE THIMBLE
300A 4 PIN 660/1100V SOLID INTERIOR PRODUCTS

PART No.	I.D.	CRIMP DIE No.	INSERTION DEPTH
F-3838-1	5.5	38-57 Cu	25 MIN
F-3838-2	6.2	38-74 Cu	25 MIN
F-3838-3	8.0	38-92 Cu	25 MIN
F-3838-4	10.0	38-115 Cu	25 MIN
F-3838-5	11.0	38-115 Cu	25 MIN
F-3838-6	13.5	38-142 Cu	25 MIN
F-3838-7	14.5	38-165 Cu	25 MIN
F-3838-8	16.6	38-165 Cu	25 MIN
F-3838-9	18.0	38-183 Cu	25 MIN
F-3838-10	20.7	SOLDER ONLY	25 MIN

F-3347 RANGE - MAIN PHASE THIMBLE
300/425A 4 PIN 660/1100V RUBBER INTERIOR PRODUCTS

PART No.	I.D.	CRIMP DIE No.	INSERTION DEPTH
F-3347-000	6.2	38-74 Cu	25 MIN
F-3347-00	8.0	38-92 Cu	25 MIN
F-3347-0	10.0	38-115 Cu	25 MIN
F-3347-1	11.0	38-115 Cu	25 MIN
F-3347-2	13.5	38-142 Cu	25 MIN
F-3347-3	14.5	38-165 Cu	25 MIN
F-3347-4	16.6	38-165 Cu	25 MIN
F-3347-5	18.0	38-183 Cu	25 MIN
F-3347-6	20.7	SOLDER ONLY	25 MIN

F-4789 RANGE - MAIN PHASE THIMBLE
300/425A 4 & 6 PIN 660/1100/3300V SS INTERIOR

PART No.	I.D.	UTILUX DIE No.	INSERTION DEPTH
F-4789-25	8.0	38-92 Cu	25 MIN
F-4789-35	10.0	38-115 Cu	25 MIN
F-4789-50	11.0	38-115 Cu	25 MIN
F-4789-70	13.5	38-142Cu	25 MIN
F-4789-95	14.5	38-165 Cu	25 MIN
F-4789-120	16.6	38-165 Cu	25 MIN
F-4789-150	18.5	38-200 Cu	25 MIN
F-4789-185	20.5	38-200Cu	25 MIN

PLUG DRAWING REFERENCE

DWG	MAIN	PILOT
F-911	F-3347	F-3589-1
F-914	F-3962	F-3984
F-916	F-3838	F-3984
F-920	F-3347	F-3589-1
F-929	F-3962	F-3589-1
F-941	F-3962	F-3589-1
F-945	F-3962	F-3984
F-951	F-4789	F-4791
F-952	F-4789	F-4791
F-953	F-4789	F-4791
F-954	F-4789	F-4791
F-955	F-4789	F-4791
F-956	F-4789	F-4791

PILOT THIMBLE

PART No.	ID	CRIMP DIE No.	INSERTION DEPTH
F-3589-1	3	SOLDER	10 MIN
F-3589-1W	3	SOLDER	10 MIN
F-3984	12.7	SOLDER	10 MIN

F-4791 RANGE - PILOT SOCKET/THIMBLE
300/425A 4 & 6 PIN 660/1100/3300V SS INTERIOR

PART No.	ID	CRIMP DIE No.	INSERTION DEPTH
F-4791	3.0	38-44 CU	15

300/425A RECEPTACLES

F-4606 RANGE - MAIN PHASE THIMBLE
300/425A 4/6 PIN 660/1100/3300V PRODUCTS

PART No.	I.D.	UTILUX DIE No.	INSERTION DEPTH
F-4606-1	8.4	38-92 Cu	25 MIN
F-4606-2	9.5	38-104 Cu	25 MIN
F-4606-3	11.2	38-115 Cu	25 MIN
F-4606-4	13.4	38-142 Cu	25 MIN
F-4606-5	15.5	38-165 Cu	25 MIN
F-4606-6	16.3	38-183 Cu	25 MIN
F-4606-7	18.4	38-200 Cu	25 MIN
F-4606-8	21.0	SOLDER ONLY	25 MIN

F-853 RANGE - PILOT THIMBLE
300/425A 4/6 PIN 660/1100/3300V PRODUCTS

PART No.	ID	UTILUX CRIMP DIE	INSERTION DEPTH
F-853-1	3.0	38-44 CU	15 MIN
F-853-2	3.0	38-44 CU	15 MIN
F-853-3	3.0	38-44 CU	15 MIN

Ex TESTING & CERTIFICATION
IECEx ExTC 22.0037X-0
ANZEx 22.4181-0
This document is approved as specified in the listed certificate

RECEPTACLE DRAWING REFERENCE

DWG	MAIN	PILOT
F-915	F-4606	F-853-3
F-921	F-4606	F-853-2
F-926	F-4606	F-853-1
F-927	F-4606	F-853-3
F-932	F-4606	F-853-1
F-933	F-4606	F-853-3
F-934	F-4606	F-853-3
F-935	F-4606	F-853-2
F-940	F-4606	F-853-3
F-944	F-4606	F-853-3

NOTE:
1. MATERIAL:
(COPPER) C14700 OR C11000 OR C10100 TO AS/NZS 1567-1997
SILVER PLATED TO AS 1856-2004 CuAg 08 (IF APPLICABLE)

REV	ZONE	DESCRIPTION	DATE	APPROVED
A		DRAWING CREATED.	07/02/2023	

THIS DRAWING REMAINS THE PROPERTY OF CMI ELECTRICAL PRODUCTS AND MUST NOT BE LENT OR COPIED.

DO NOT SCALE DRAWING
DIMENSIONS IN MILLIMETRES

cmi Electrical Products
A division of CMI Operations Pty Ltd

MINTO INDUSTRIAL PRODUCTS

GENERAL TOLERANCE ±0.25
ANGULAR TOLERANCE ±0.5°
MATERIAL
FINISH

DESCRIPTION: MAIN PHASE/PILOT THIMBLES RESTRAINED PRODUCT RANGE
SCALE
DATE 22/11/2022
DRAWN EL
CHECKED
A3
DRAWING No. F-946

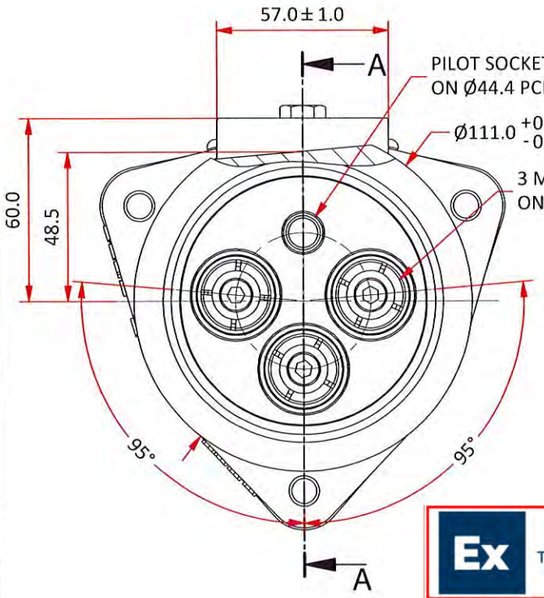

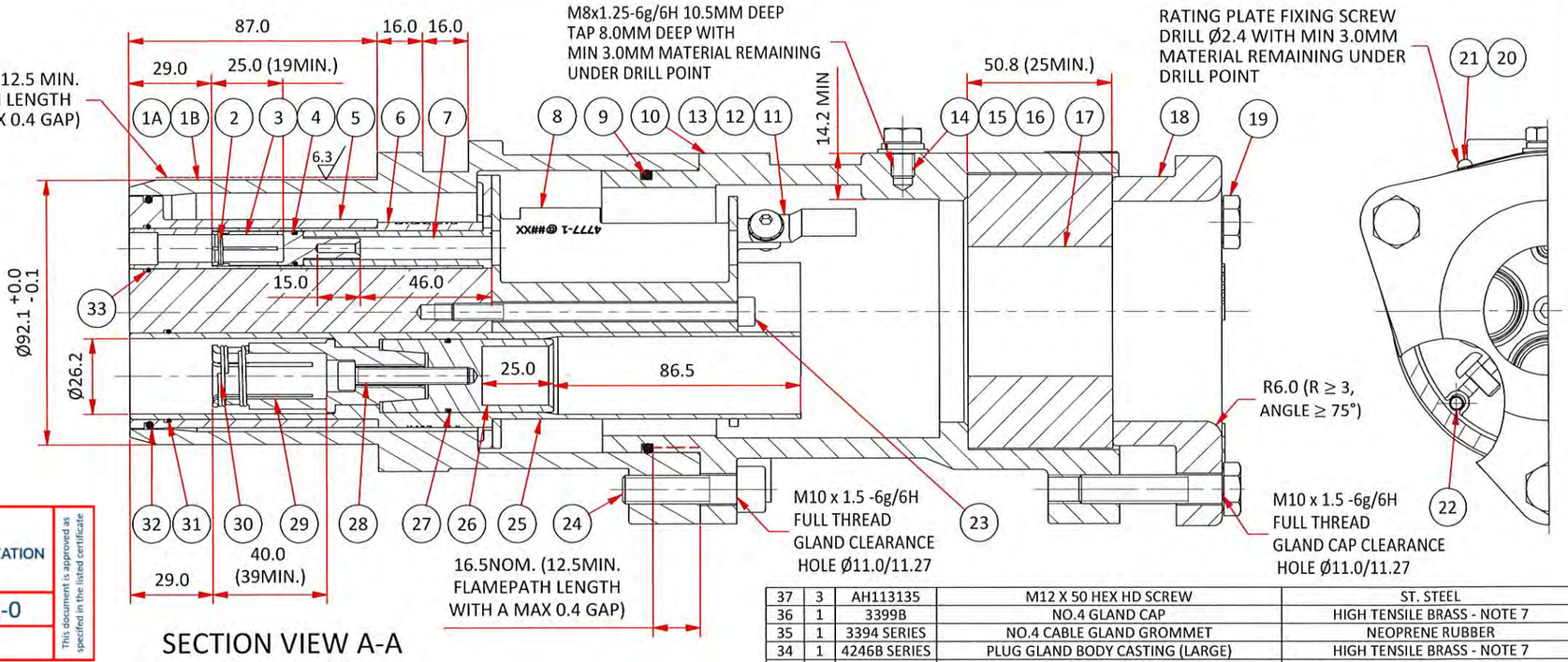

SECTION VIEW A-A

Ex TESTING & CERTIFICATION

IECEx ExTC 22.0037X-0

ANZEx 22.4181-0

This document is approved as specified in the listed certificate

3054 SERIES GROMMETS			
PART No.	CABLE ACCEPTANCE	PART No.	CABLE ACCEPTANCE
3054-25	22.0-25.0	3054-54	50.0-54.0
3054-31	24.0-31.0	3054-57	53.0-57.0
3054-35	30.0-35.0	3054-60	56.0-60.0
3054-38	34.0-38.0	3054-64	59.0-64.0
3054-41	37.0-41.0	3054-67	63.0-67.0
3054-45	40.0-45.0	3054-70	66.0-70.0
3054-47	44.0-47.0	3054-73	69.0-73.0
3054-51	46.0-51.0	3054-76	72.0-76.0

3394 SERIES GROMMETS			
PART No.	CABLE ACCEPTANCE	PART No.	CABLE ACCEPTANCE
3394-58	53.0-58.0	3394-75	71.0-75.0
3394-61	56.0-61.0	3394-78	74.0-78.0
3394-63	59.0-63.0	3394-81	77.0-81.0
3394-66	62.0-66.0	3394-84	80.0-84.0
3394-69	65.0-69.0	3394-87	83.0-87.0
3394-72	68.0-72.0		

MARKING DETAILS

M.I.P.
AF3#4T@*
300A
VOLTS 1=1100V 6=660V
@ NOSE CONE S=ST. STEEL BLANK=BRONZE
* GLAND 3=SMALL 4=LARGE
IP66/68
Ex db I Mb
IECEx ExTC 22.0037X
ANZEx 22.4181
TYPE A
S.O xxxxx-xx
WARNING
DO NOT SEPARATE WHEN ENERGIZED

NOTES
1. MINIMUM WALL THICKNESS 3.0mm UNLESS OTHERWISE SPECIFIED ON THE DRAWING.
2. IN CASE OF BLIND HOLES FOR SCREWS, THE REMAINING THICKNESS OF MATERIAL UNDER THE HOLE IS A MINIMUM OF ONE-THIRD OF THE SCREW DIAMETER OR 3MM, WHICHEVER IS GREATER.
3. THE SPECIFICATIONS, DIMENSIONS AND RATINGS COMPLY WITH AS/NZS1299 ELECTRICAL EQUIPMENT FOR MINES AND QUARRIES.
4. SPECIAL FASTENERS COMPLY WITH ISO 262 WITH A TOLERANCE FIT 6g/6H AND THREAD ENGAGEMENT IS ≥ THE MAJOR DIAMETER AND THE CLEARANCE HOLE IS NOT > H13 (ISO286-2).
5. ALL MACHINED FLAMEPATH SURFACES AVERAGE Ra DOES NOT EXCEED 6.3µm (ISO468).
6. MATERIAL: STAINLESS STEEL 304 WITH A MINIMUM TENSILE STRENGTH 450 MPa AND MINIMUM 10% ELONGATION.
7. HIGH TENSILE BRASS C86500 TO AS1565-1996 WITH A MINIMUM TENSILE STRENGTH 450 MPa AND MINIMUM 10% ELONGATION.
8. UTILUX CRIMP DIE'S TO BE USED FOR CONNECTION'S BETWEEN THIMBLES AND CABLES AS PER AS/NZS4325 (IEC1238) OR SOLDER.
9. TESTING ACCORDING TO IEC60079-0 USING MANDRELS REQUIRES A TIGHTENING TORQUE ON THE CABLE CLAMPING SCREWS OF 25Nm.
10. MINIMUM PROPERTY CLASS FOR STAINLESS STEEL FASTENERS IS A-70.
11. INTERNAL VOLUME: USING SMALL GLAND = 1994 cm³; LARGE GLAND = 2150cm³.

ITEM	QTY	PART NUMBER	DESCRIPTION	MATERIAL
37	3	AH113135	M12 X 50 HEX HD SCREW	ST. STEEL
36	1	3399B	NO.4 GLAND CAP	HIGH TENSILE BRASS - NOTE 7
35	1	3394 SERIES	NO.4 CABLE GLAND GROMMET	NEOPRENE RUBBER
34	1	4246B SERIES	PLUG GLAND BODY CASTING (LARGE)	HIGH TENSILE BRASS - NOTE 7
33	1	AI019063	O'RING ID 13.5 X SECT 1.5	NITRILE
32	1	AI019056	O'RING ID 75.87 X SECT 2.62	NITRILE
31	3	AI019064	O'RING ID 29.5 X SECT 1.5	NITRILE
30	6	AH201432	CONTACT SOCKET SPRING	ST. STEEL
29	3	4787	300/425A MAIN SOCKET - ID 15.8	COPPER-SILVER PL. C14700 TO AS1565-1997
28	3	AH115147	M6 X 40 SKT HD CAP SCREW	ST. STEEL
27	3	AI019077	O'RING ID 23 X SECT 1.5	NITRILE
26	3	4789 SERIES	300/425A MAIN THIMBLE	COPPER-SILVER PL. C14700 TO AS1565-1997
25	3	4785-29	300/425A MAIN INSULATOR - 29 SET BACK	PTFE
24	3	AH117113	M10 X 40 SKT HD SET SCREW	ST. STEEL
23	1	AH115145	M6 X 100 SKT HD CAP SCREW	ST. STEEL
22	1	AH107002	SPRING ROLL PIN M5 X 14	ST. STEEL
21	2	AH009788	No.4 GAUGE X 3/16" U-DRIVE SCREW	STEEL-ZINC PL.
20	1	AX004076	RATING PLATE	BRASS
19	3	AH113116S	M10 X 50 HEX HD SCREW	ST. STEEL
18	1	3576	No. 3 GLAND CAP CASTING	HIGH TENSILE BRASS
17	1	3054 SERIES	No. 3 CABLE GLAND GROMMET	NEOPRENE RUBBER
16	1	AH009277	5/16" X 5/8" X 18 WASHER	STEEL-ZINC PL.
15	1	AH009363	5/16" SQ SECT SPRING WASHER	STEEL-ZINC PL.
14	1	AH113091	M8 X 10 HEX HD SET SCREW	STEEL-ZINC PL.
13	3	AH152001	M6 EXT SERRATED WASHER	ST. STEEL
12	3	AH117116	M6 X 12 BUTTON HD SCREW	ST. STEEL
11	3	CCAL25-6	STANDARD COPPER LUGS 25-6	COPPER-SILVER PL.
10	1	3339B SERIES	300/425A PLUG GLAND BODY	HIGH TENSILE BRASS - NOTE 7
9	1	AI019011	O'RING ID 91.67 X SECT 3.53	NITRILE
8	1	4777-1	300A/425A PLUG UPPER INTERIOR - 4 PINS	ST. STEEL
7	1	4790-2-29	300/425A PLUG PILOT INSULATOR - 29 INSERT	PTFE
6	1	4790-1-29	300/425A PLUG PILOT INSULATOR - 29 SET BACK	PTFE
5	1	4777-2	300A/425A PLUG LOWER INTERIOR - 4 PINS	ST. STEEL
4	1	AI019078	O'RING ID 9.5 X SECT 1.5	NITRILE
3	1	4791	300/425A PLUG PILOT SOCKET	COPPER-SILVER PL. C14700 TO AS1567-1997
2	1	AH201364	CONTACT SOCKET SPRING	ST. STEEL
1B	1	4779-1	300/425A NOSE CONE	STAINLESS STEEL - NOTE 6
1A	1	3342-6	300/425A NOSE CONE - BRASS	HIGH TENSILE BRASS - NOTE 7

PARTS LIST

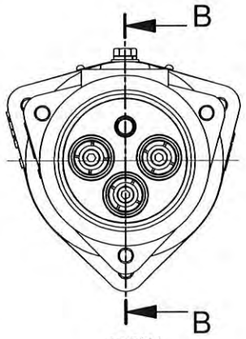

1100V
B24 BLUE

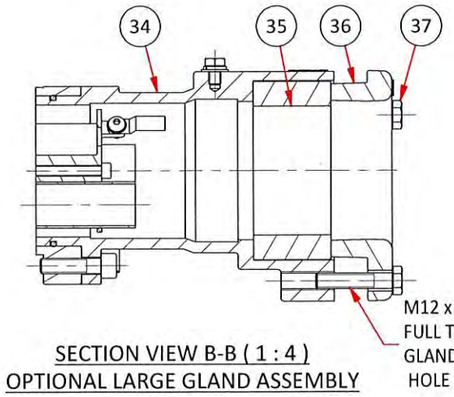

SECTION VIEW B-B (1 : 4)
OPTIONAL LARGE GLAND ASSEMBLY

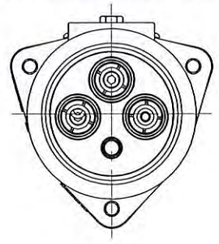

660V
X15 ORANGE

REV	ZONE	DESCRIPTION	DATE	APPROVED
A		DRAWING CREATED	06/03/2023	

THIS DRAWING REMAINS THE PROPERTY OF CMI ELECTRICAL PRODUCTS AND MUST NOT BE LENT OR COPIED.

DO NOT SCALE DRAWING
DIMENSIONS IN MILLIMETERS

cmi Electrical Products
A division of CMI Operations Pty Ltd

GENERAL TOLERANCE ± 0.25
ANGULAR TOLERANCE ± 0.5

MATERIAL: REFER TO TABLE

FINISH: COLOUR CODED TO AS 2700

MINTO INDUSTRIAL PRODUCTS

DESCRIPTION: 300A 660/1100V RESTRAINED PLUG
ST. STEEL/PTFE INTERIOR

DRWN: JM Zhang
DATE: 3/08/2022
CHECKED: PM
SCALE: 1 : 2
A3
DRAWING No.: F-951

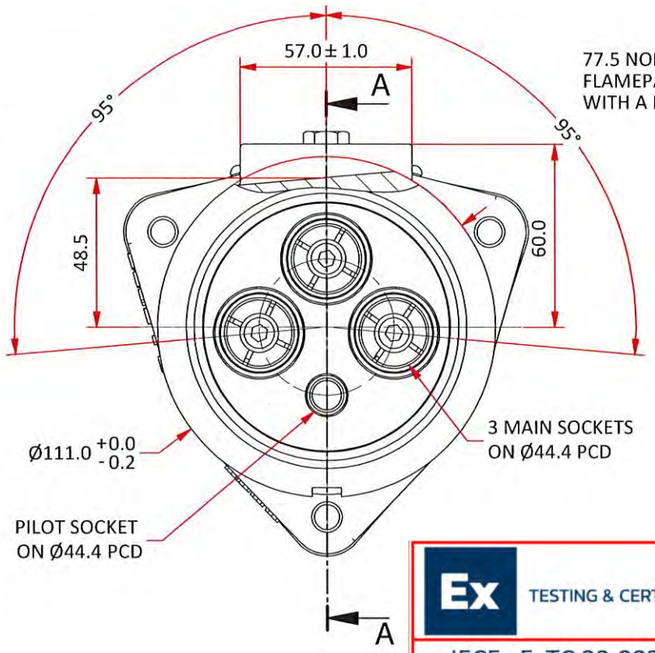

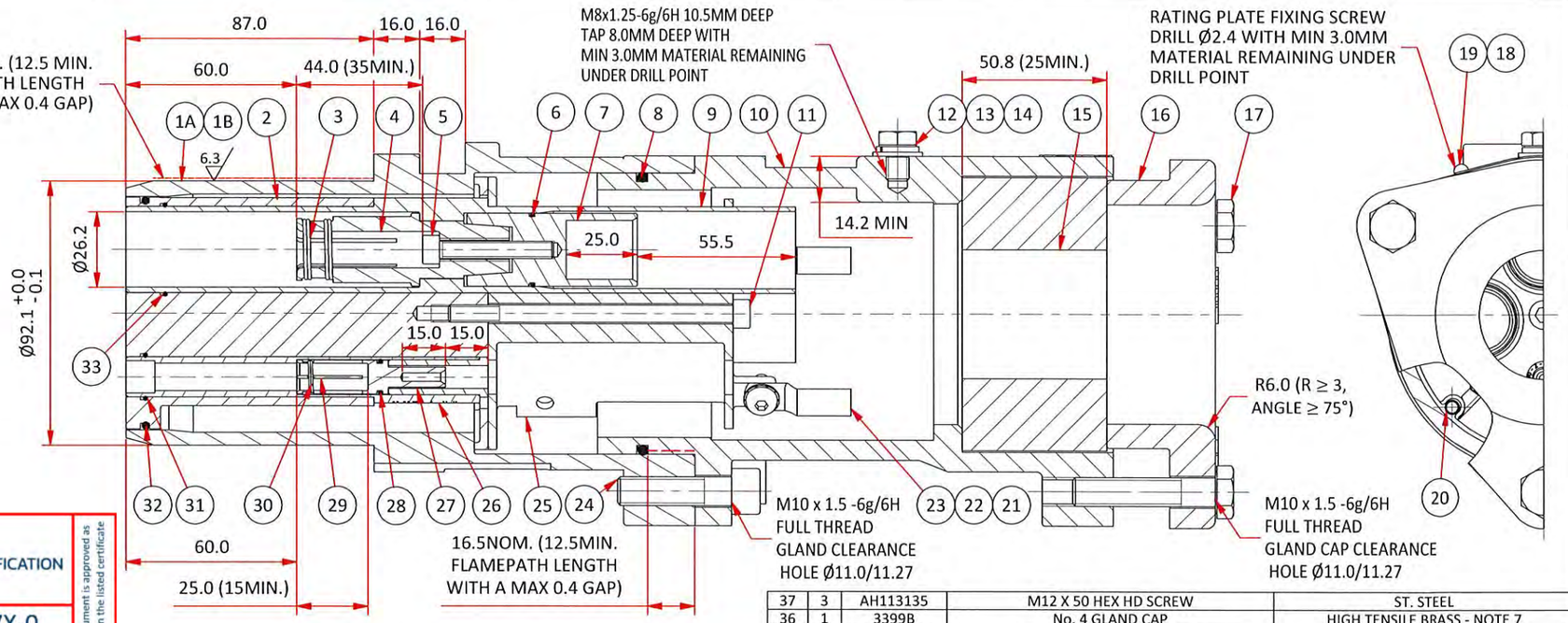

SECTION VIEW A-A

Ex TESTING & CERTIFICATION

IECEx ExTC 22.0037X-0

ANZEx 22.4181-0

This document is approved as specified in the listed certificate

3054 SERIES GROMMETS			
PART No.	CABLE ACCEPTANCE	PART No.	CABLE ACCEPTANCE
3054-25	22.0-25.0	3054-54	50.0-54.0
3054-31	24.0-31.0	3054-57	53.0-57.0
3054-35	30.0-35.0	3054-60	56.0-60.0
3054-38	34.0-38.0	3054-64	59.0-64.0
3054-41	37.0-41.0	3054-67	63.0-67.0
3054-45	40.0-45.0	3054-70	66.0-70.0
3054-47	44.0-47.0	3054-73	69.0-73.0
3054-51	46.0-51.0	3054-76	72.0-76.0

3394 SERIES GROMMETS			
PART No.	CABLE ACCEPTANCE	PART No.	CABLE ACCEPTANCE
3394-58	53.0-58.0	3394-75	71.0-75.0
3394-61	56.0-61.0	3394-78	74.0-78.0
3394-63	59.0-63.0	3394-81	77.0-81.0
3394-66	62.0-66.0	3394-84	80.0-84.0
3394-69	65.0-69.0	3394-87	83.0-87.0
3394-72	68.0-72.0		

MARKING DETAILS

M.I.P.
AF334T@*
300A
3300V
@ NOSE CONE S=ST. STEEL
BLANK=BRONZE
* GLAND 3=SMALL
4=LARGE
IP66/68
Ex db I Mb
IECEx ExTC 22.0037X
ANZEx 22.4181
TYPE A
S.O xxxxx-xx
WARNING
DO NOT SEPARATE WHEN ENERGIZED

NOTES
1. MINIMUM WALL THICKNESS 3.0mm UNLESS OTHERWISE SPECIFIED ON THE DRAWING.
2. IN CASE OF BLIND HOLES FOR SCREWS, THE REMAINING THICKNESS OF MATERIAL UNDER THE HOLE IS A MINIMUM OF ONE-THIRD OF THE SCREW DIAMETER OR 3MM, WHICHEVER IS GREATER.
3. THE SPECIFICATIONS, DIMENSIONS AND RATINGS COMPLY WITH AS/NZS1299 ELECTRICAL EQUIPMENT FOR MINES AND QUARRIES.
4. SPECIAL FASTENERS COMPLY WITH ISO 262 WITH A TOLERANCE FIT 6g/6H AND THREAD ENGAGEMENT IS ≥ THE MAJOR DIAMETER AND THE CLEARANCE HOLE IS NOT > H13 (ISO286-2).
5. ALL MACHINED FLAMEPATH SURFACES AVERAGE Ra DOES NOT EXCEED 6.3µm (ISO468).
6. MATERIAL: STAINLESS STEEL 304 WITH A MINIMUM TENSILE STRENGTH 450 MPa AND MINIMUM 10% ELONGATION.
7. HIGH TENSILE BRASS C86500 TO AS1565-1996 WITH A MINIMUM TENSILE STRENGTH 450 MPa AND MINIMUM 10% ELONGATION.
8. UTILUX CRIMP DIE'S TO BE USED FOR CONNECTION'S BETWEEN THIMBLES AND CABLES AS PER AS/NZS4325 (IEC1238) OR SOLDER.
9. TESTING ACCORDING TO IEC60079-0 USING MANDRELS REQUIRES A TIGHTENING TORQUE ON THE CABLE CLAMPING SCREWS OF 25Nm.
10. MINIMUM PROPERTY CLASS FOR STAINLESS STEEL FASTENERS IS A-70.
11. INTERNAL VOLUME: USING SMALL GLAND = 1994 cm³; LARGE GLAND = 2150cm³.

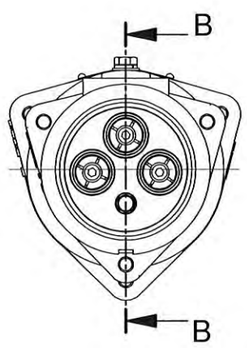

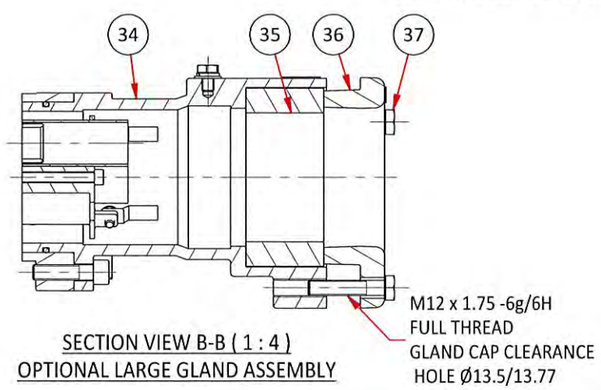

SECTION VIEW B-B (1 : 4)
OPTIONAL LARGE GLAND ASSEMBLY

ITEM	QTY	PART NUMBER	DESCRIPTION	MATERIAL
37	3	AH113135	M12 X 50 HEX HD SCREW	ST. STEEL
36	1	3399B	No. 4 GLAND CAP	HIGH TENSILE BRASS - NOTE 7
35	1	3394 SERIES	No. 4 CABLE GLAND GROMMET	NEOPRENE RUBBER
34	1	4246B SERIES	PLUG GLAND BODY CASTING (LARGE)	HIGH TENSILE BRASS - NOTE 7
33	3	AI019064	O'RING ID 29.5 X SECT 1.5	NITRILE
32	1	AI019056	O'RING ID 75.87 X SECT 2.62	NITRILE
31	1	AI019063	O'RING ID 13.5 X SECT 1.5	NITRILE
30	1	AH201364	CONTACT SOCKET SPRING	ST. STEEL
29	1	4791	300/425A PLUG PILOT SOCKET	COPPER-SILVER PL. C14700 TO AS1567-1997
28	1	AI019078	O'RING ID 9.5 X SECT 1.5	NITRILE
27	1	4790-2-60	300/425A PLUG PILOT INSULATOR - 60 INSERT	PTFE
26	1	4790-1-60	300/425A PLUG PILOT INSULATOR - 60 SET BACK	PTFE
25	1	4777-1	300A/425A PLUG UPPER INTERIOR - 4 PINS	ST. STEEL
24	3	AH117113	M10 X 40 SKT HD SET SCREW	ST. STEEL
23	3	CCAL25-6	STANDARD COPPER LUGS 25-6	COPPER-SILVER PL.
22	3	AH117116	M6 X 12 BUTTON HD SCREW	ST. STEEL
21	3	AH152001	M6 EXT SERRATED WASHER	ST. STEEL
20	1	AH107002	SPRING ROLL PIN M5 X 14	ST. STEEL
19	2	AH009788	No.4 GAUGE X 3/16" U-DRIVE SCREW	STEEL-ZINC PL.
18	1	AX004076	RATING PLATE	BRASS
17	3	AH113116S	M10 X 50 HEX HD SCREW	ST. STEEL
16	1	3576	No. 3 GLAND CAP CASTING	HIGH TENSILE BRASS - NOTE 7
15	1	3054 SERIES	No. 3 CABLE GLAND GROMMET	NEOPRENE RUBBER
14	1	AH009277	5/16" X 5/8" X 18 WASHER	STEEL-ZINC PL.
13	1	AH009363	5/16" SQ SECT SPRING WASHER	STEEL-ZINC PL.
12	1	AH113091	M8 X 10 HEX HD SET SCREW	STEEL-ZINC PL.
11	1	AH115145	M6 X 100 SKT HD CAP SCREW	ST. STEEL
10	1	3339B SERIES	300/425A PLUG GLAND BODY	HIGH TENSILE BRASS
9	3	4785-60	300/425A MAIN INSULATOR - 60 SET BACK	PTFE
8	1	AI019011	O'RING ID 91.67 X SECT 3.53	NITRILE
7	3	4789 SERIES	300/425A MAIN THIMBLE	COPPER-SILVER PL. C14700 TO AS1565-1997
6	3	AI019077	O'RING ID 23 X SECT 1.5	NITRILE
5	3	AH115147	M6 X 40 SKT HD CAP SCREW	ST. STEEL
4	3	4786	300A MAIN SOCKET - ID 12.6	COPPER-SILVER PL. C14700 TO AS1567-1997
3	6	AH201432	CONTACT SOCKET SPRING	ST. STEEL
2	1	4777-2	300A/425A PLUG LOWER INTERIOR - 4 PINS	ST. STEEL
1B	1	4779-2	300/425A NOSE CONE WITH SLOT	STAINLESS STEEL - NOTE 6
1A	1	3342-7	300/425A NOSE CONE WITH SLOT - BRASS	HIGH TENSILE BRASS - NOTE 7

PARTS LIST

REV	ZONE	DESCRIPTION	DATE	APPROVED
A		DRAWING CREATED	06/03/2023	

THIS DRAWING REMAINS THE PROPERTY OF CMI ELECTRICAL PRODUCTS AND MUST NOT BE LENT OR COPIED.

DO NOT SCALE DRAWING DIMENSIONS IN MILLIMETERS

cmi Electrical Products
A division of CMI Operations Pty Ltd

GENERAL TOLERANCE ± 0.25
ANGULAR TOLERANCE ± 0.5

MATERIAL: REFER TO TABLE

FINISH: R13 RED TO AS 2700

MINTO INDUSTRIAL PRODUCTS

DESCRIPTION: 300A 3300V RESTRAINED PLUG ST. STEEL/PTFE INTERIOR

DRWN: JM Zhang
DATE: 3/08/2022
CHECKED: PM
SCALE: 1 : 2
A3
DRAWING No.: F-952

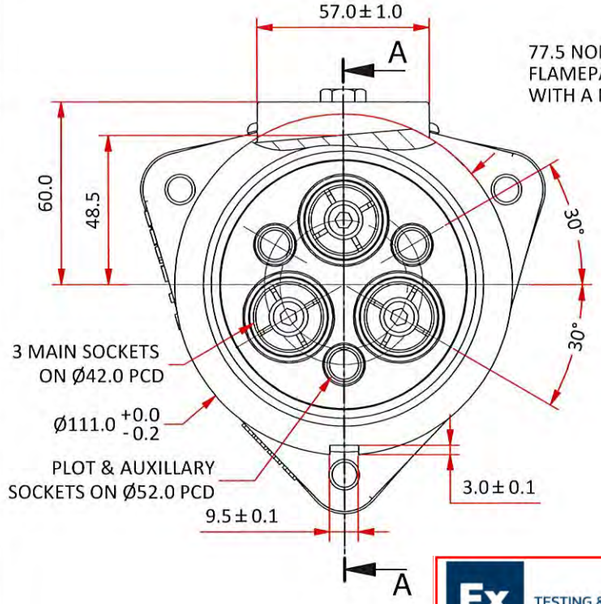

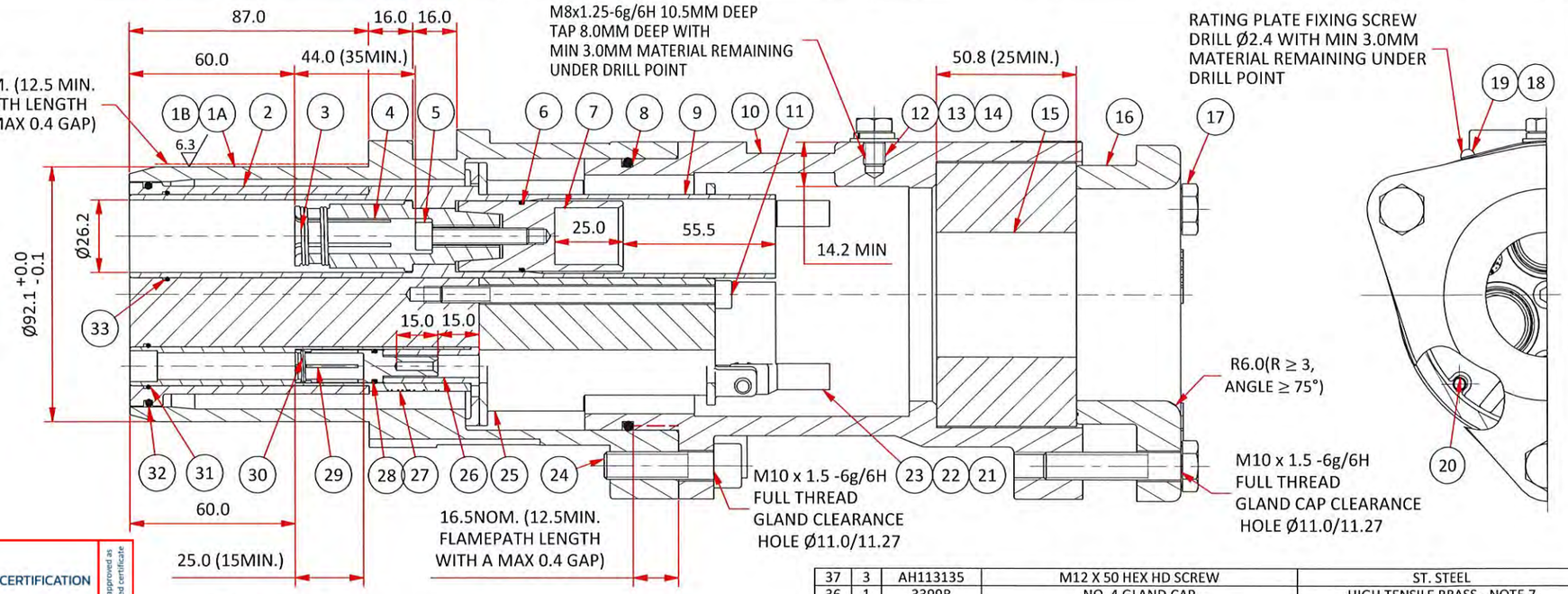

SECTION VIEW A-A

Ex TESTING & CERTIFICATION

IECEx ExTC 22.0037X-0

ANZEx 22.4181-0

This document is approved as specified in the listed certificate

3054 SERIES GROMMETS			
PART No.	CABLE ACCEPTANCE	PART No.	CABLE ACCEPTANCE
3054-25	22.0-25.0	3054-54	50.0-54.0
3054-31	24.0-31.0	3054-57	53.0-57.0
3054-35	30.0-35.0	3054-60	56.0-60.0
3054-38	34.0-38.0	3054-64	59.0-64.0
3054-41	37.0-41.0	3054-67	63.0-67.0
3054-45	40.0-45.0	3054-70	66.0-70.0
3054-47	44.0-47.0	3054-73	69.0-73.0
3054-51	46.0-51.0	3054-76	72.0-76.0

3394 SERIES GROMMETS			
PART No.	CABLE ACCEPTANCE	PART No.	CABLE ACCEPTANCE
3394-58	53.0-58.0	3394-75	71.0-75.0
3394-61	56.0-61.0	3394-78	74.0-78.0
3394-63	59.0-63.0	3394-81	77.0-81.0
3394-66	62.0-66.0	3394-84	80.0-84.0
3394-69	65.0-69.0	3394-87	83.0-87.0
3394-72	68.0-72.0		

MARKING DETAILS

M.I.P.
AF3#6T@*
300A
VOLTS 1=1100V 3=3300V
@ NOSE CONE S=ST. STEEL BLANK=BRONZE
* GLAND 3=SMALL 4=LARGE
IP66/68
Ex db I Mb
IECEx ExTC 22.0037X
ANZEx 22.4181
TYPE A
S.O xxxxx-xx
WARNING
DO NOT SEPARATE WHEN ENERGIZED

NOTES
1. MINIMUM WALL THICKNESS 3.0mm UNLESS OTHERWISE SPECIFIED ON THE DRAWING.
2. IN CASE OF BLIND HOLES FOR SCREWS, THE REMAINING THICKNESS OF MATERIAL UNDER THE HOLE IS A MINIMUM OF ONE-THIRD OF THE SCREW DIAMETER OR 3MM, WHICHEVER IS GREATER.
3. THE SPECIFICATIONS, DIMENSIONS AND RATINGS COMPLY WITH AS/NZS1299 ELECTRICAL EQUIPMENT FOR MINES AND QUARRIES.
4. SPECIAL FASTENERS COMPLY WITH ISO 262 WITH A TOLERANCE FIT 6g/6H AND THREAD ENGAGEMENT IS ≥ THE MAJOR DIAMETER AND THE CLEARANCE HOLE IS NOT > H13 (ISO286-2).
5. ALL MACHINED FLAMEPATH SURFACES AVERAGE Ra DOES NOT EXCEED 6.3µm (ISO468).
6. MATERIAL: STAINLESS STEEL 304 WITH A MINIMUM TENSILE STRENGTH 450 MPa AND MINIMUM 10% ELONGATION.
7. HIGH TENSILE BRASS C86500 TO AS1565-1996 WITH A MINIMUM TENSILE STRENGTH 450 MPa AND MINIMUM 10% ELONGATION.
8. UTILUX CRIMP DIE'S TO BE USED FOR CONNECTION'S BETWEEN THIMBLES AND CABLES AS PER AS/NZS4325 (IEC1238) OR SOLDER.
9. TESTING ACCORDING TO IEC60079-0 USING MANDRELS REQUIRES A TIGHTENING TORQUE ON THE CABLE CLAMPING SCREWS OF 25Nm.
10. MINIMUM PROPERTY CLASS FOR STAINLESS STEEL FASTENERS IS A-70.
11. INTERNAL VOLUME: USING SMALL GLAND = 1994 cm^3; LARGE GLAND = 2150cm^3.

ITEM	QTY	PART NUMBER	DESCRIPTION	MATERIAL
37	3	AH113135	M12 X 50 HEX HD SCREW	ST. STEEL
36	1	3399B	NO. 4 GLAND CAP	HIGH TENSILE BRASS - NOTE 7
35	1	3394 SEREIES	NO. 4 CABLE GLAND GROMMET	NEOPRENE RUBBER
34	1	4246B SERIES	PLUG GLAND BODY CASTING (LARGE)	HIGH TENSILE BRASS - NOTE 7
33	3	AI019064	O'RING ID 29.5 X SECT 1.5	NITRILE
32	1	AI019056	O'RING ID 75.87 X SECT 2.62	NITRILE
31	3	AI019063	O'RING ID 13.5 X SECT 1.5	NITRILE
30	3	AH201364	CONTACT SOCKET SPRING	ST. STEEL
29	3	4791	300/425A PLUG PILOT SOCKET	COPPER-SILVER PL. C14700 TO AS1567-1997
28	3	AI019078	O'RING ID 9.5 X SECT 1.5	NITRILE
27	3	4790-1-60	300/425A PLUG PILOT INSULATOR - 60 SET BACK	PTFE
26	3	4790-2-60	300/425A PLUG PILOT INSULATOR - 60 INSERT	PTFE
25	1	4778-1	300A/425A PLUG UPPER INTERIOR - 6P	ST. STEEL
24	3	AH117113	M10 X 40 SKT HD SET SCREW	ST. STEEL
23	3	CCAL25-6	STANDARD COPPER LUGS 25-6	COPPER-SILVER PL.
22	3	AH117116	M6 X 12 BUTTON HD SCREW	ST. STEEL
21	3	AH152001	M6 EXT SERRATED WASHER	ST. STEEL
20	1	AH107002	SPRING ROLL PIN M5 X 14	ST. STEEL
19	2	AH009788	No.4 GAUGE X 3/16" U-DRIVE SCREW	STEEL-ZINC PL.
18	1	AX004076	RATING PLATE	BRASS
17	3	AH113116S	M10 X 50 HEX HD SCREW	ST. STEEL
16	1	3576	No. 3 GLAND CAP CASTING	HIGH TENSILE BRASS - NOTE 7
15	1	3054 SERIES	No. 3 CABLE GLAND GROMMET	NEOPRENE RUBBER
14	1	AH009277	5/16" X 5/8" X 18 WASHER	STEEL-ZINC PL.
13	1	AH009363	5/16" SQ SECT SPRING WASHER	STEEL-ZINC PL.
12	1	AH113091	M8 X 10 HEX HD SET SCREW	STEEL-ZINC PL.
11	1	AH115145	M6 X 100 SKT HD CAP SCREW	ST. STEEL
10	1	3339B SERIES	300/425A PLUG GLAND BODY	HIGH TENSILE BRASS
9	3	4785-60	300/425A MAIN INSULATOR - 60 SET BACK	PTFE
8	1	AI019011	O'RING ID 91.67 X SECT 3.53	NITRILE
7	3	4789 SERIES	300/425A MAIN THIMBLE	COPPER-SILVER PL. C14700 TO AS1565-1997
6	3	AI019077	O'RING ID 23 X SECT 1.5	NITRILE
5	3	AH151072	M6 x 35 SKT HD CAP SCREW	ST. STEEL
4	3	4786	300A MAIN SOCKET - ID 12.6	COPPER-SILVER PL. C14700 TO AS1565-1997
3	6	AH201432	CONTACT SOCKET SPRING	ST. STEEL
2	1	4778-2	300A/425A PLUG LOWER INTERIOR - 6P	ST. STEEL
1B	1	4779-2	300/425A NOSE CONE WITH SLOT	STAINLESS STEEL - NOTE 6
1A	1	3342-7	300/425A NOSE CONE WITH SLOT - BRASS	HIGH TENSILE BRASS - NOTE 7

PARTS LIST

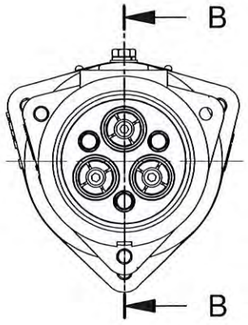

3300V
R13 RED

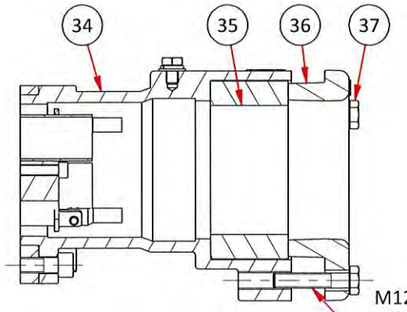

SECTION VIEW B-B (1 : 4)
OPTIONAL LARGE GLAND ASSEMBLY

M12 x 1.75 -6g/6H FULL THREAD GLAND CAP CLEARANCE HOLE Ø13.5/13.77

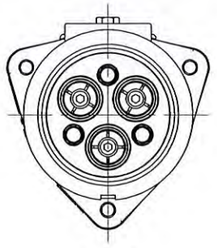

1100V
B24 BLUE

REV	ZONE	DESCRIPTION	DATE	APPROVED
A		DRAWING CREATED	06/03/2023	MJ.

THIS DRAWING REMAINS THE PROPERTY OF CMI ELECTRICAL PRODUCTS AND MUST NOT BE LENT OR COPIED.

DO NOT SCALE DRAWING DIMENSIONS IN MILLIMETERS

cmi Electrical Products
A division of CMI Operations Pty Ltd

GENERAL TOLERANCE ± 0.25
ANGULAR TOLERANCE ± 0.5

MATERIAL: REFER TO TABLE

FINISH: COLOUR CODED TO AS 2700

MINTO INDUSTRIAL PRODUCTS

DESCRIPTION: 300A 1100/3300V 6P RESTRAINED PLUG ST. STEEL/PTFE INTERIOR

DRWN: JM Zhang | DATE: 3/08/2022 | CHECKED: PW | SCALE: 1 : 2 | A3 | DRAWING No. F-953

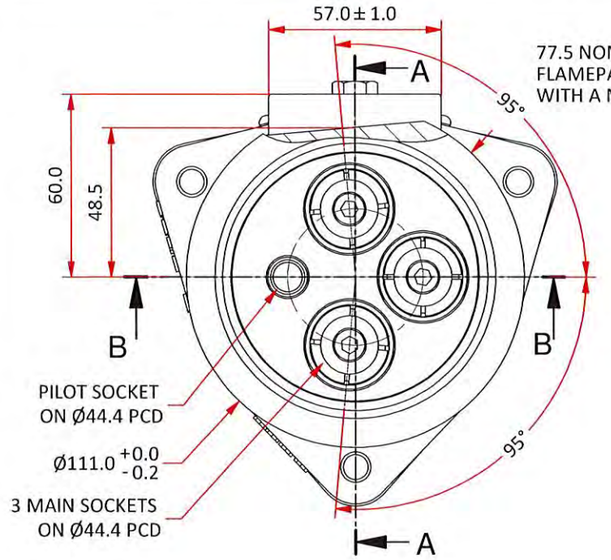

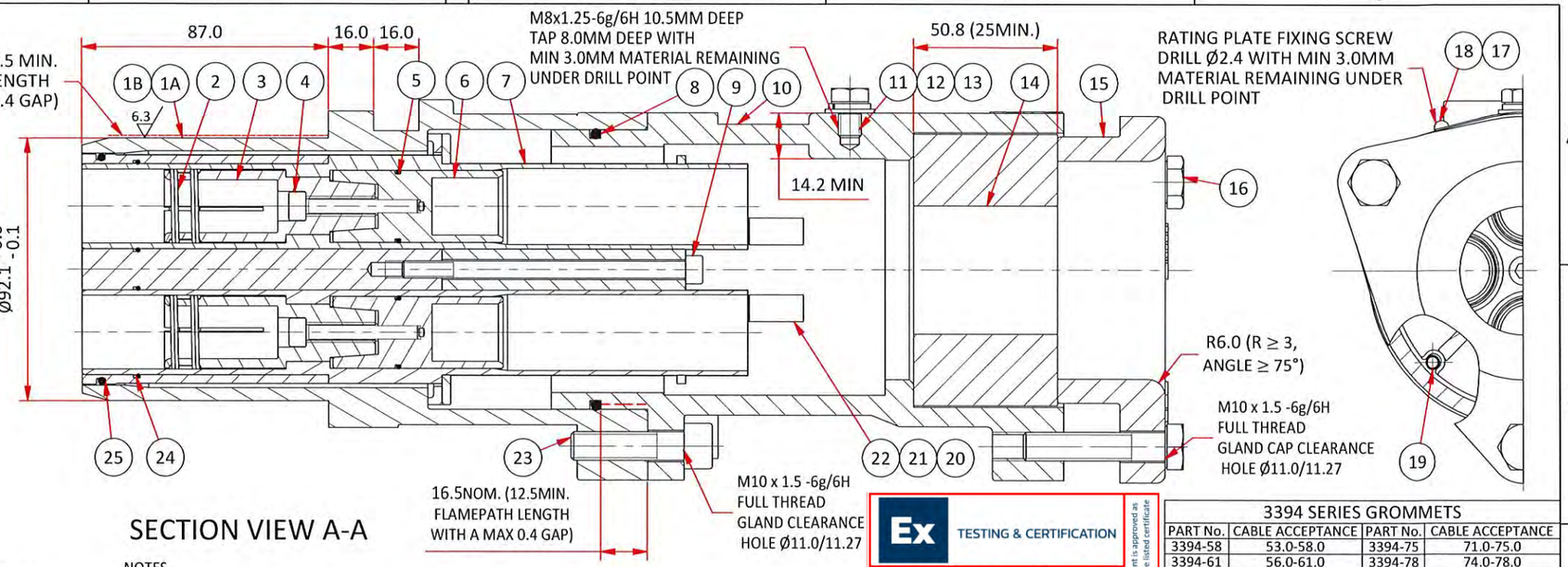

SECTION VIEW A-A

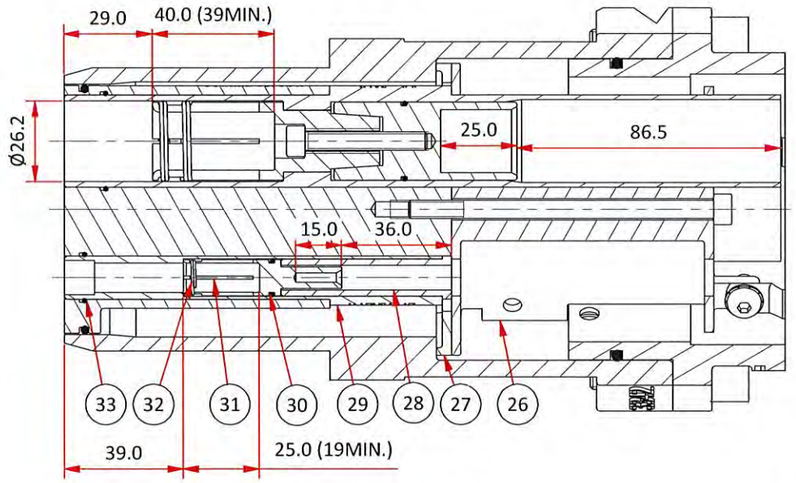

SECTION VIEW B-B

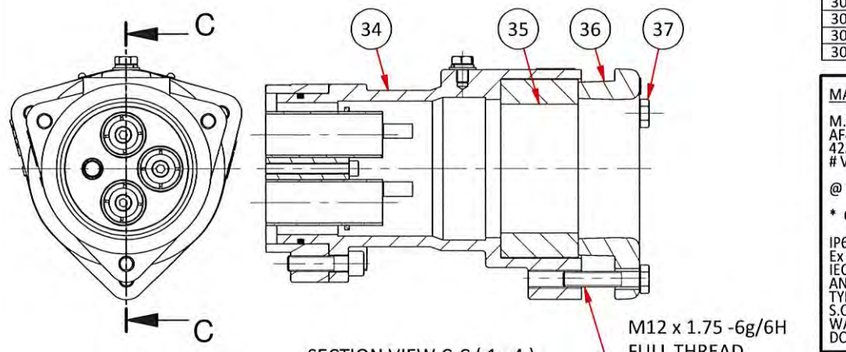

1100V
B24 BLUE/N24 SILVER
(N24 SILVER MIN.25mm)

SECTION VIEW C-C (1 : 4)
OPTIONAL LARGE GLAND ASSEMBLY

NOTES

1. MINIMUM WALL THICKNESS 3.0mm UNLESS OTHERWISE SPECIFIED ON THE DRAWING.
2. IN CASE OF BLIND HOLES FOR SCREWS, THE REMAINING THICKNESS OF MATERIAL UNDER THE HOLE IS A MINIMUM OF ONE-THIRD OF THE SCREW DIAMETER OR 3MM, WHICHEVER IS GREATER.
3. THE SPECIFICATIONS, DIMENSIONS AND RATINGS COMPLY WITH AS/NZS1299 ELECTRICAL EQUIPMENT FOR MINES AND QUARRIES.
4. SPECIAL FASTENERS COMPLY WITH ISO 262 WITH A TOLERANCE FIT 6g/6H AND THREAD ENGAGEMENT IS ≥ THE MAJOR DIAMETER AND THE CLEARANCE HOLE IS NOT > H13 (ISO286-2).
5. ALL MACHINED FLAMEPATH SURFACES AVERAGE Ra DOES NOT EXCEED 6.3µm (ISO468).
6. MATERIAL: STAINLESS STEEL 304 WITH A MINIMUM TENSILE STRENGTH 450 MPa AND MINIMUM 10% ELONGATION.
7. HIGH TENSILE BRASS C86500 TO AS1565-1996 WITH A MINIMUM TENSILE STRENGTH 450 MPa AND MINIMUM 10% ELONGATION.
8. UTILUX CRIMP DIE'S TO BE USED FOR CONNECTION'S BETWEEN THIMBLES AND CABLES AS PER AS/NZS4325 (IEC1238) OR SOLDER.
9. TESTING ACCORDING TO IEC60079-0 USING MANDRELS REQUIRES A TIGHTENING TORQUE ON THE CABLE CLAMPING SCREWS OF 25Nm.
10. MINIMUM PROPERTY CLASS FOR STAINLESS STEEL FASTENERS IS A-70.
11. INTERNAL VOLUME: USING SMALL GLAND = 1994 cm³; LARGE GLAND = 2150cm³.

3054 SERIES GROMMETS

PART No.	CABLE ACCEPTANCE	PART No.	CABLE ACCEPTANCE
3054-25	22.0-25.0	3054-54	50.0-54.0
3054-31	24.0-31.0	3054-57	53.0-57.0
3054-35	30.0-35.0	3054-60	56.0-60.0
3054-38	34.0-38.0	3054-64	59.0-64.0
3054-41	37.0-41.0	3054-67	63.0-67.0
3054-45	40.0-45.0	3054-70	66.0-70.0
3054-47	44.0-47.0	3054-73	69.0-73.0
3054-51	46.0-51.0	3054-76	72.0-76.0

MARKING DETAILS

M.I.P.
AF4#4T@*
425A
VOLTS 1=1100V 6=660V
@ NOSE CONE S=ST. STEEL BLANK=BRONZE
* GLAND 3=SMALL 4=LARGE
IP66/68
Ex db I Mb
IECEx ExTC 22.0037X
ANZEx 22.4181
TYPE A
S.O xxxxx-xx
WARNING
DO NOT SEPARATE WHEN ENERGIZED

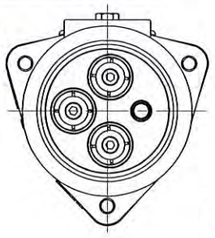

660V
X15 ORANGE/N24 SILVER
(N24 SILVER MIN.25mm)

Ex TESTING & CERTIFICATION
IECEx ExTC 22.0037X-0
ANZEx 22.4181-0
This document is approved as specified in the listed certificate

3394 SERIES GROMMETS

PART No.	CABLE ACCEPTANCE	PART No.	CABLE ACCEPTANCE
3394-58	53.0-58.0	3394-75	71.0-75.0
3394-61	56.0-61.0	3394-78	74.0-78.0
3394-63	59.0-63.0	3394-81	77.0-81.0
3394-66	62.0-66.0	3394-84	80.0-84.0
3394-69	65.0-69.0	3394-87	83.0-87.0
3394-72	68.0-72.0		

ITEM	QTY	PART NUMBER	DESCRIPTION	MATERIAL
37	3	AH113135	M12 X 50 HEX HD SCREW	ST. STEEL
36	1	3399B	No. 4 GLAND CAP	HIGH TENSILE BRASS - NOTE 7
35	1	3394 SERIES	No. 4 CABLE GLAND GROMMET	NEOPRENE RUBBER
34	1	4246B SERIES	PLUG GLAND BODY CASTING (LARGE)	HIGH TENSILE BRASS - NOTE 7
33	1	AI019063	O'RING ID 13.5 X SECT 1.5	NITRILE
32	1	AH201364	CONTACT SOCKET SPRING	ST. STEEL
31	1	4791	300/425A PLUG PILOT SOCKET	COPPER-SILVER PL. C14700 TO AS1567-1997
30	1	AI019078	O'RING ID 9.5 X SECT 1.5	NITRILE
29	1	4790-1-39	300/425A PLUG PILOT INSULATOR - 39 SET BACK	PTFE
28	1	4790-2-39	300/425A PLUG PILOT INSULATOR - 39 INSERT	PTFE
27	1	4777-2	300A/425A PLUG LOWER INTERIOR - 4 PINS	ST. STEEL
26	1	4777-1	300A/425A PLUG UPPER INTERIOR - 4 PINS	ST. STEEL
25	1	AI019056	O'RING ID 75.87 X SECT 2.62	NITRILE
24	3	AI019064	O'RING ID 29.5 X SECT 1.5	NITRILE
23	3	AH117113	M10 X 40 SKT HD SET SCREW	ST. STEEL
22	3	CCAL25-6	STANDARD COPPER LUGS 25-6	COPPER-SILVER PL.
21	3	AH117116	M6 X 12 BUTTON HD SCREW	ST. STEEL
20	3	AH152001	M6 EXT SERRATED WASHER	ST. STEEL
19	1	AH107002	SPRING ROLL PIN M5 X 14	ST. STEEL
18	2	AH009788	No.4 GAUGE X 3/16" U-DRIVE SCREW	STEEL-ZINC PL.
17	1	AX004076	RATING PLATE	BRASS
16	3	AH113116S	M10 X 50 HEX HD SCREW	ST. STEEL
15	1	3576	No. 3 GLAND CAP CASTING	HIGH TENSILE BRASS
14	1	3054 SERIES	No. 3 CABLE GLAND GROMMET	NEOPRENE RUBBER
13	1	AH009277	5/16" X 5/8" X 18 WASHER	STEEL-ZINC PL.
12	1	AH009363	5/16" SQ SECT SPRING WASHER	STEEL-ZINC PL.
11	1	AH113091	M8 X 10 HEX HD SET SCREW	STEEL-ZINC PL.
10	1	3339B SERIES	300/425A PLUG GLAND BODY	HIGH TENSILE BRASS
9	1	AH115145	M6 X 100 SKT HD CAP SCREW	ST. STEEL
8	1	AI019011	O'RING ID 91.67 X SECT 3.53	NITRILE
7	3	4785-29	300/425A MAIN INSULATOR - 29 SET BACK	PTFE
6	3	4789 SERIES	300/425A MAIN THIMBLE	COPPER-SILVER PL. C14700 TO AS1565-1997
5	3	AI019077	O'RING ID 23 X SECT 1.5	NITRILE
4	3	AH115147	M6 X 40 SKT HD CAP SCREW	ST. STEEL
3	3	4788	425A MAIN SOCKET - ID 19	COPPER-SILVER PL. C14700 TO AS1565-1997
2	6	AH201363	CONTACT SOCKET SPRING	ST. STEEL
1B	1	4779-1	300/425A NOSE CONE	STAINLESS STEEL - NOTE 6
1A	1	3342-6	300/425A NOSE CONE - BRASS	HIGH TENSILE BRASS - NOTE 7

PARTS LIST

THIS DRAWING REMAINS THE PROPERTY OF CMI ELECTRICAL PRODUCTS AND MUST NOT BE LENT OR COPIED.

cmi Electrical Products
A division of CMI Operations Pty Ltd

MINTO INDUSTRIAL PRODUCTS

GENERAL TOLERANCE ± 0.25
ANGULAR TOLERANCE ± 0.5
MATERIAL: REFER TO TABLE
FINISH: COLOUR CODED TO AS 2700
DO NOT SCALE DRAWING
DIMENSIONS IN MILLIMETERS

DESCRIPTION: 425A 660/1100V RESTRAINED PLUG ST. STEEL/PTFE INTERIOR
DRWN: JM Zhang
DATE: 3/08/2022
CHECKED: Pm
SCALE: 1 : 2
A3
DRAWING No. F-954

REV	ZONE	DESCRIPTION	DATE	APPROVED
A		DRAWING CREATED	06/03/2023	MH

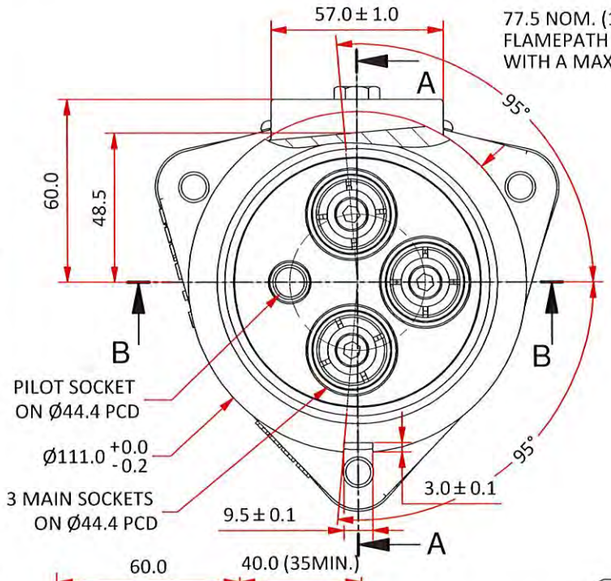

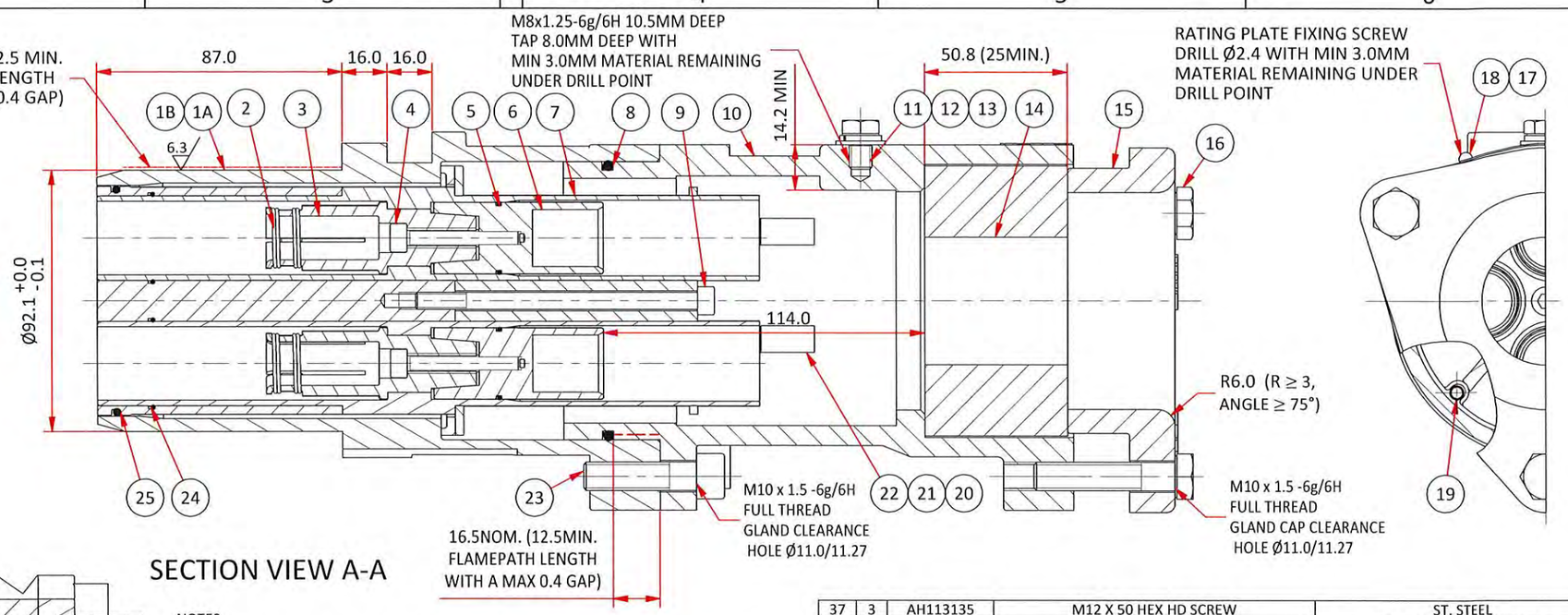

SECTION VIEW A-A

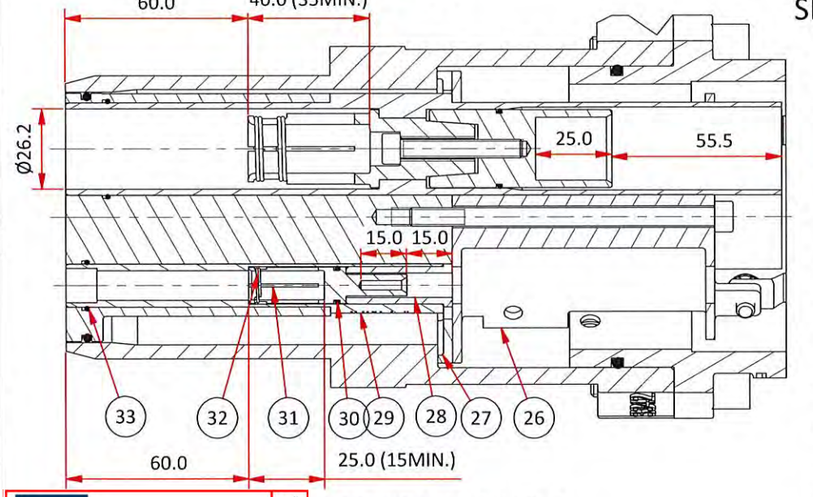

SECTION VIEW B-B

NOTES
1. MINIMUM WALL THICKNESS 3.0mm UNLESS OTHERWISE SPECIFIED ON THE DRAWING.
2. IN CASE OF BLIND HOLES FOR SCREWS, THE REMAINING THICKNESS OF MATERIAL UNDER THE HOLE IS A MINIMUM OF ONE-THIRD OF THE SCREW DIAMETER OR 3MM, WHICHEVER IS GREATER.
3. THE SPECIFICATIONS, DIMENSIONS AND RATINGS COMPLY WITH AS/NZS1299 ELECTRICAL EQUIPMENT FOR MINES AND QUARRIES.
4. SPECIAL FASTENERS COMPLY WITH ISO 262 WITH A TOLERANCE FIT 6g/6H AND THREAD ENGAGEMENT IS ≥ THE MAJOR DIAMETER AND THE CLEARANCE HOLE IS NOT > H13 (ISO286-2).
5. ALL MACHINED FLAMEPATH SURFACES AVERAGE Ra DOES NOT EXCEED 6.3µm (ISO468).
6. MATERIAL: STAINLESS STEEL 304 WITH A MINIMUM TENSILE STRENGTH 450 MPa AND MINIMUM 10% ELONGATION.
7. HIGH TENSILE BRASS C86500 TO AS1565-1996 WITH A MINIMUM TENSILE STRENGTH 450 MPa AND MINIMUM 10% ELONGATION.
8. UTILUX CRIMP DIE'S TO BE USED FOR CONNECTION'S BETWEEN THIMBLES AND CABLES AS PER AS/NZS4325 (IEC1238) OR SOLDER.
9. TESTING ACCORDING TO IEC60079-0 USING MANDRELS REQUIRES A TIGHTENING TORQUE ON THE CABLE CLAMPING SCREWS OF 25Nm.
10. MINIMUM PROPERTY CLASS FOR STAINLESS STEEL FASTENERS IS A-70.
11. INTERNAL VOLUME: USING SMALL GLAND = 1994 cm³; LARGE GLAND = 2150cm³.

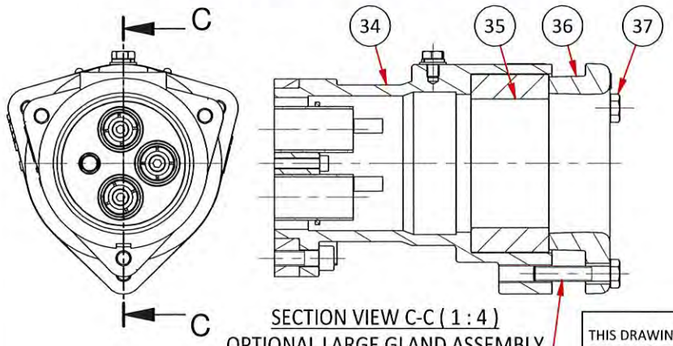

SECTION VIEW C-C (1 : 4)
OPTIONAL LARGE GLAND ASSEMBLY

M12 x 1.75 -6g/6H FULL THREAD GLAND CAP CLEARANCE HOLE Ø13.5/13.77

ITEM	QTY	PART NUMBER	DESCRIPTION	MATERIAL
37	3	AH113135	M12 X 50 HEX HD SCREW	ST. STEEL
36	1	3399B	NO. 4 GLAND CAP	HIGH TENSILE BRASS - NOTE 7
35	1	3394 SERIES	NO. 4 CABLE GLAND GROMMET	NEOPRENE RUBBER
34	1	4246B SERIES	PLUG GLAND BODY CASTING (LARGE)	HIGH TENSILE BRASS - NOTE 7
33	1	AI019063	O'RING ID 13.5 X SECT 1.5	NITRILE
32	1	AH201364	CONTACT SOCKET SPRING	ST. STEEL
31	1	4791	300/425A PLUG PILOT SOCKET	COPPER-SILVER PL. C14700 TO AS1567-1997
30	1	AI019078	O'RING ID 9.5 X SECT 1.5	NITRILE
29	1	4790-1-60	300/425A PLUG PILOT INSULATOR - 60 SET BACK	PTFE
28	1	4790-2-60	300/425A PLUG PILOT INSULATOR - 60 INSERT	PTFE
27	1	4777-2	300A/425A PLUG LOWER INTERIOR - 4 PINS	ST. STEEL
26	1	4777-1	300A/425A PLUG UPPER INTERIOR - 4 PINS	ST. STEEL
25	1	AI019056	O'RING ID 75.87 X SECT 2.62	NITRILE
24	3	AI019064	O'RING ID 29.5 X SECT 1.5	NITRILE
23	3	AH117113	M10 X 40 SKT HD SET SCREW	ST. STEEL
22	3	CCAL25-6	STANDARD COPPER LUGS 25-6	COPPER-SILVER PL.
21	3	AH117116	M6 X 12 BUTTON HD SCREW	ST. STEEL
20	3	AH152001	M6 EXT SERRATED WASHER	ST. STEEL
19	1	AH107002	SPRING ROLL PIN M5 X 14	ST. STEEL
18	2	AH009788	No.4 GAUGE X 3/16" U-DRIVE SCREW	STEEL-ZINC PL.
17	1	AX004076	RATING PLATE	BRASS
16	3	AH113116S	M10 X 50 HEX HD SCREW	ST. STEEL
15	1	3576	No. 3 GLAND CAP CASTING	HIGH TENSILE BRASS - NOTE 7
14	1	3054 SERIES	No. 3 CABLE GLAND GROMMET	NEOPRENE RUBBER
13	1	AH009277	5/16" X 5/8" X 18 WASHER	STEEL-ZINC PL.
12	1	AH009363	5/16" SQ SECT SPRING WASHER	STEEL-ZINC PL.
11	1	AH113091	M8 X 10 HEX HD SET SCREW	STEEL-ZINC PL.
10	1	3339B SERIES	300/425A PLUG GLAND BODY	HIGH TENSILE BRASS
9	1	AH115145	M6 X 100 SKT HD CAP SCREW	ST. STEEL
8	1	AI019011	O'RING ID 91.67 X SECT 3.53	NITRILE
7	3	4785-60	300/425A MAIN INSULATOR - 60 SET BACK	PTFE
6	3	4789 SERIES	300/425A MAIN THIMBLE	COPPER-SILVER PL. C14700 TO AS1565-1997
5	3	AI019077	O'RING ID 23 X SECT 1.5	NITRILE
4	3	AH115147	M6 X 40 SKT HD CAP SCREW	ST. STEEL
3	3	4787	300/425A MAIN SOCKET - ID 15.8	COPPER-SILVER PL. C14700 TO AS1565-1997
2	6	AH201432	CONTACT SOCKET SPRING	ST. STEEL
1B	1	4779-2	300/425A NOSE CONE WITH SLOT	STAINLESS STEEL - NOTE 6
1A	1	3342-7	300/425A NOSE CONE WITH SLOT - BRASS	HIGH TENSILE BRASS - NOTE 7

PARTS LIST

TESTING & CERTIFICATION
IECEx ExTC 22.0037X-0
ANZEx 22.4181-0
This document is approved as specified in the listed certificate

3394 SERIES GROMMETS

PART No.	CABLE ACCEPTANCE	PART No.	CABLE ACCEPTANCE
3394-58	53.0-58.0	3394-75	71.0-75.0
3394-61	56.0-61.0	3394-78	74.0-78.0
3394-63	59.0-63.0	3394-81	77.0-81.0
3394-66	62.0-66.0	3394-84	80.0-84.0
3394-69	65.0-69.0	3394-87	83.0-87.0
3394-72	68.0-72.0		

3054 SERIES GROMMETS

PART No.	CABLE ACCEPTANCE	PART No.	CABLE ACCEPTANCE
3054-25	22.0-25.0	3054-54	50.0-54.0
3054-31	24.0-31.0	3054-57	53.0-57.0
3054-35	30.0-35.0	3054-60	56.0-60.0
3054-38	34.0-38.0	3054-64	59.0-64.0
3054-41	37.0-41.0	3054-67	63.0-67.0
3054-45	40.0-45.0	3054-70	66.0-70.0
3054-47	44.0-47.0	3054-73	69.0-73.0
3054-51	46.0-51.0	3054-76	72.0-76.0

MARKING DETAILS

M.I.P.
AF434T@*
425A
3300V
@ NOSE CONE S=ST. STEEL
BLANK=BRONZE
* GLAND 3=SMALL
4=LARGE
IP66/68
Ex db I Mb
IECEx ExTC 22.0037X
ANZEx 22.4181
TYPE A
S.O xxxxx-xx
WARNING
DO NOT SEPARATE WHEN ENERGIZED

REV	ZONE	DESCRIPTION	DATE	APPROVED
A		DRAWING CREATED	06/03/2023	

THIS DRAWING REMAINS THE PROPERTY OF CMI ELECTRICAL PRODUCTS AND MUST NOT BE LENT OR COPIED.

DO NOT SCALE DRAWING DIMENSIONS IN MILLIMETERS

cmi Electrical Products
A division of CMI Operations Pty Ltd

MINTO INDUSTRIAL PRODUCTS

GENERAL TOLERANCE ± 0.25
ANGULAR TOLERANCE ± 0.5
MATERIAL: REFER TO TABLE
FINISH: R13 RED/N24 SILVER (N24 SILVER MIN. 25MM) TO AS 2700

DESCRIPTION: 425A 3300V RESTRAINED PLUG ST. STEEL/PTFE INTERIOR
DRWN: JM Zhang
DATE: 3/08/2022
CHECKED:
SCALE: 1 : 2
A3
DRAWING No. F-955

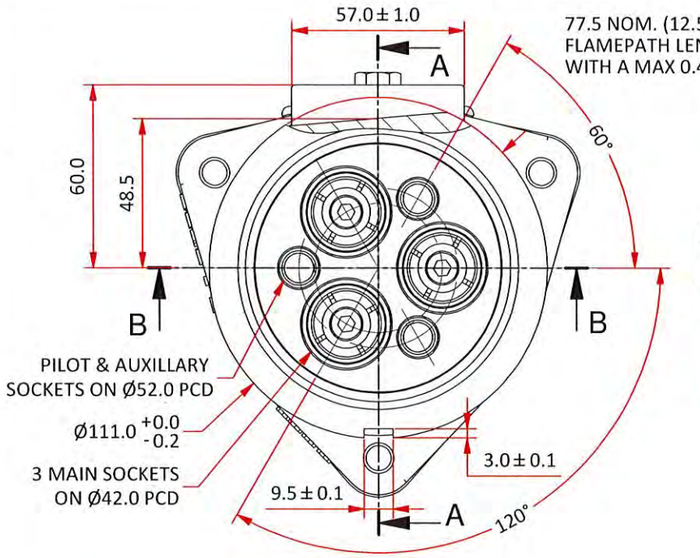

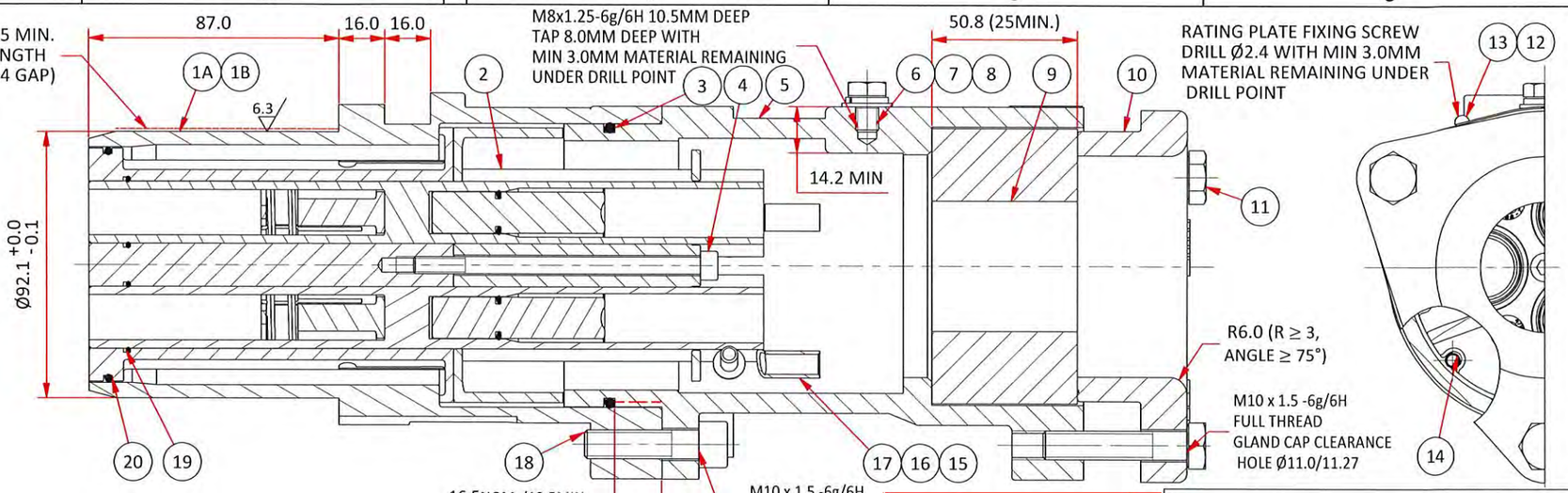

SECTION VIEW A-A

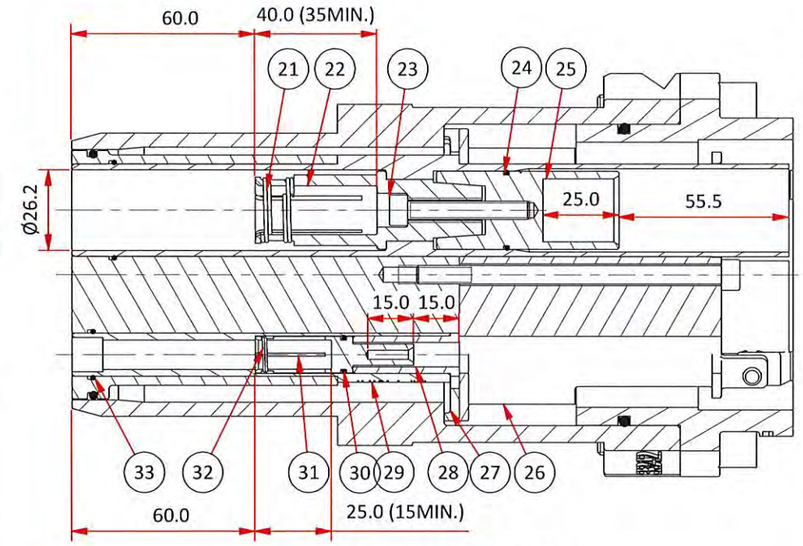

SECTION VIEW B-B

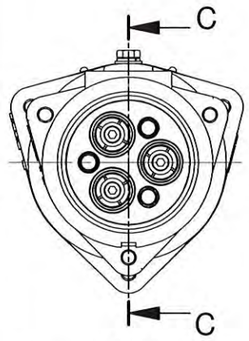

3300V
R13 RED/N24 SILVER
(N24 SILVER MIN.25mm)

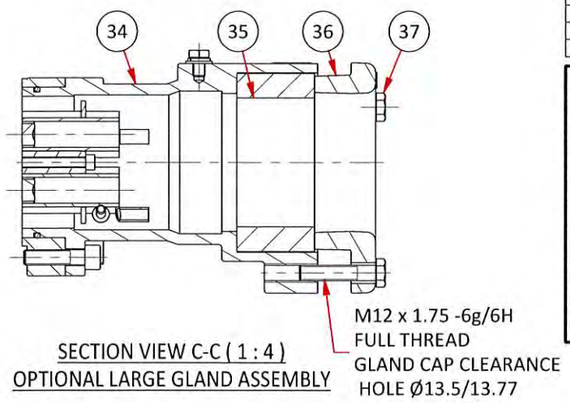

SECTION VIEW C-C (1 : 4)
OPTIONAL LARGE GLAND ASSEMBLY

NOTES

1. MINIMUM WALL THICKNESS 3.0mm UNLESS OTHERWISE SPECIFIED ON THE DRAWING.
2. IN CASE OF BLIND HOLES FOR SCREWS, THE REMAINING THICKNESS OF MATERIAL UNDER THE HOLE IS A MINIMUM OF ONE-THIRD OF THE SCREW DIAMETER OR 3MM, WHICHEVER IS GREATER.
3. THE SPECIFICATIONS, DIMENSIONS AND RATINGS COMPLY WITH AS/NZS1299 ELECTRICAL EQUIPMENT FOR MINES AND QUARRIES.
4. SPECIAL FASTENERS COMPLY WITH ISO 262 WITH A TOLERANCE FIT 6g/6H AND THREAD ENGAGEMENT IS ≥ THE MAJOR DIAMETER AND THE CLEARANCE HOLE IS NOT > H13 (ISO286-2).
5. ALL MACHINED FLAMEPATH SURFACES AVERAGE Ra DOES NOT EXCEED 6.3µm (ISO468).
6. MATERIAL: STAINLESS STEEL 304 WITH A MINIMUM TENSILE STRENGTH 450 MPa AND MINIMUM 10% ELONGATION.
7. HIGH TENSILE BRASS C86500 TO AS1565-1996 WITH A MINIMUM TENSILE STRENGTH 450 MPa AND MINIMUM 10% ELONGATION.
8. UTILUX CRIMP DIE'S TO BE USED FOR CONNECTION'S BETWEEN THIMBLES AND CABLES AS PER AS/NZS4325 (IEC1238) OR SOLDER.
9. TESTING ACCORDING TO IEC60079-0 USING MANDRELS REQUIRES A TIGHTENING TORQUE ON THE CABLE CLAMPING SCREWS OF 25Nm.
10. MINIMUM PROPERTY CLASS FOR STAINLESS STEEL FASTENERS IS A-70.
11. INTERNAL VOLUME: USING SMALL GLAND = 1994 cm³; LARGE GLAND = 2150cm³.

3054 SERIES GROMMETS

PART No.	CABLE ACCEPTANCE	PART No.	CABLE ACCEPTANCE
3054-25	22.0-25.0	3054-54	50.0-54.0
3054-31	24.0-31.0	3054-57	53.0-57.0
3054-35	30.0-35.0	3054-60	56.0-60.0
3054-38	34.0-38.0	3054-64	59.0-64.0
3054-41	37.0-41.0	3054-67	63.0-67.0
3054-45	40.0-45.0	3054-70	66.0-70.0
3054-47	44.0-47.0	3054-73	69.0-73.0
3054-51	46.0-51.0	3054-76	72.0-76.0

MARKING DETAILS

M.I.P.
AF4#6T@*
425A
VOLTS 1=1100V 3=3300V
@ NOSE CONE S=ST. STEEL BLANK=BRONZE
* GLAND 3=SMALL 4=LARGE
IP66/68
Ex db I Mb
IECEx ExTC 22.0037X
ANZEx 22.4181
TYPE A
S.O xxxxx-xx
WARNING
DO NOT SEPARATE WHEN ENERGIZED

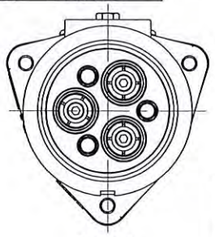

1100V
B24 BLUE/N24 SILVER
(N24 SILVER MIN.25mm)

Ex TESTING & CERTIFICATION
IECEx ExTC 22.0037X-0
ANZEx 22.4181-0
This document is approved as specified in the listed certificate

3394 SERIES GROMMETS

PART No.	CABLE ACCEPTANCE	PART No.	CABLE ACCEPTANCE
3394-58	53.0-58.0	3394-75	71.0-75.0
3394-61	56.0-61.0	3394-78	74.0-78.0
3394-63	59.0-63.0	3394-81	77.0-81.0
3394-66	62.0-66.0	3394-84	80.0-84.0
3394-69	65.0-69.0	3394-87	83.0-87.0
3394-72	68.0-72.0		

ITEM	QTY	PART NUMBER	DESCRIPTION	MATERIAL
37	3	AH113135	M12 X 50 HEX HD SCREW	ST. STEEL
36	1	3399B	NO.4 GLAND CAP	HIGH TENSILE BRASS - NOTE 7
35	1	3394 SERIES	NO.4 CABLE GLAND GROMMET	NEOPRENE RUBBER
34	1	4246B SERIES	PLUG GLAND BODY CASTING (LARGE)	HIGH TENSILE BRASS - NOTE 7
33	3	AI019063	O'RING ID 13.5 X SECT 1.5	NITRILE
32	3	AH201364	CONTACT SOCKET SPRING	ST. STEEL
31	3	4791	300/425A PLUG PILOT SOCKET	COPPER-SILVER PL. C14700 TO AS1567-1997
30	3	AI019078	O'RING ID 9.5 X SECT 1.5	NITRILE
29	3	4790-1-60	300/425A PLUG PILOT INSULATOR - 60 SET BACK	PTFE
28	3	4790-2-60	300/425A PLUG PILOT INSULATOR - 60 INSERT	PTFE
27	1	4778-2	300A/425A PLUG LOWER INTERIOR - 6P	ST. STEEL
26	1	4778-1	300A/425A PLUG UPPER INTERIOR - 6P	ST. STEEL
25	3	4789 SERIES	300/425A MAIN THIMBLE	COPPER-SILVER PL. C14700 TO AS1565-1997
24	3	AI019077	O'RING ID 23 X SECT 1.5	NITRILE
23	3	AH115147	M6 X 40 SKT HD CAP SCREW	ST. STEEL
22	3	4787	300/425A MAIN SOCKET - ID 15.8	COPPER-SILVER PL. C14700 TO AS1565-1997
21	6	AH201432	CONTACT SOCKET SPRING	ST. STEEL
20	1	AI019056	O'RING ID 75.87 X SECT 2.62	NITRILE
19	3	AI019064	O'RING ID 29.5 X SECT 1.5	NITRILE
18	3	AH117113	M10 X 40 SKT HD SET SCREW	ST. STEEL
17	3	CCAL25-6	STANDARD COPPER LUGS 25-6	COPPER-SILVER PL.
16	3	AH117116	M6 X 12 BUTTON HD SCREW	ST. STEEL
15	3	AH152001	M6 EXT SERRATED WASHER	ST. STEEL
14	1	AH107002	SPRING ROLL PIN M5 X 14	ST. STEEL
13	2	AH009788	No.4 GAUGE X 3/16" U-DRIVE SCREW	STEEL-ZINC PL.
12	1	AX004076	RATING PLATE	BRASS
11	3	AH113116S	M10 X 50 HEX HD SCREW	ST. STEEL
10	1	3576	No. 3 GLAND CAP CASTING	HIGH TENSILE BRASS - NOTE 7
9	1	3054 SERIES	No. 3 CABLE GLAND GROMMET	NEOPRENE RUBBER
8	1	AH009277	5/16" X 5/8" X 18 WASHER	STEEL-ZINC PL.
7	1	AH009363	5/16" SQ SECT SPRING WASHER	STEEL-ZINC PL.
6	1	AH113091	M8 X 10 HEX HD SET SCREW	STEEL-ZINC PL.
5	1	3339B SERIES	300/425A PLUG GLAND BODY	HIGH TENSILE BRASS - NOTE 7
4	1	AH115145	M6 X 100 SKT HD CAP SCREW	ST. STEEL
3	1	AI019011	O'RING ID 91.67 X SECT 3.53	NITRILE
2	3	4785-60	300/425A MAIN INSULATOR - 60 SET BACK	PTFE
1B	1	4779-2	300/425A NOSE CONE WITH SLOT	STAINLESS STEEL - NOTE 6
1A	1	3342-7	300/425A NOSE CONE WITH SLOT - BRASS	HIGH TENSILE BRASS - NOTE 7

PARTS LIST

THIS DRAWING REMAINS THE PROPERTY OF CMI ELECTRICAL PRODUCTS AND MUST NOT BE LENT OR COPIED.

DO NOT SCALE DRAWING
DIMENSIONS IN MILLIMETERS

cmi Electrical Products
A division of CMI Operations Pty Ltd

MINTO INDUSTRIAL PRODUCTS

GENERAL TOLERANCE ± 0.25
ANGULAR TOLERANCE ± 0.5
MATERIAL: REFER TO TABLE
FINISH: COLOUR CODED TO AS 2700

DESCRIPTION: 425A 1100/3300V 6P RESTRAINED PLUG ST. STEEL/PTFE INTERIOR

DRWN	DATE		DRAWING No.
JM Zhang	3/08/2022	A3	F-956
CHECKED	SCALE 1 : 2		

REV	ZONE	DESCRIPTION	DATE	APPROVED
A		DRAWING CREATED	06/03/2023	M.

Instructions for 300/425 AMP 660/1100/3300 VOLT Restrained Range

TRP2

Catalogue Number	Description
AF3#4&@*	300A 660/1100V Restrained Plug
AF3#6&@*	300A 1100/3300V 6P Restrained Plug
AF334%@*	300A 3300V Restrained Plug
AF4#4&@*	425A 660/1100V Restrained Plug
AF4#6%@*	425A 1100/3300V 6P Restrained Plug
AF434%@*	425A 3300V Restrained Plug.
AG3#4B	300A 660/1100/3300V Restrained Receptacle
AG3#4BQR	300A 660/1100/3300V Q/R Restrained Receptacle
AG3#6B	300A 1100/3300V 6P Restrained Receptacle
AG3#6BQR	300A 1100/3300V Q/R 6P Restrained Receptacle
AG334B	300A 3300V Restrained Receptacle
AG334BQR	300A 3300V Q/R Restrained Receptacle
AG4#4B	425A 660/1100V Restrained Receptacle
AG4#4BQR	425A 660/1100V Q/R Restrained Receptacle
AG4#6BQR	425A 1100/3300V Q/R 6P Restrained Receptacle
AG434BQR	425A 3300V Q/R Restrained Receptacle
AH3#4B	300A 660/1100V Restrained Back to Back Receptacle
AH3#4BQR	300A 660/1100V Q/R Restrained Back to Back Receptacle
AH3#6B	300A 1100/3300V 6P Restrained Back to Back Receptacle
AH3#6BQR	300A 1100/3300V Q/R 6P Restrained Back to Back Receptacle
AH334B	300A 3300V Restrained Back to Back Receptacle
AH334BQR	300A 3300V Q/R Restrained Back to Back Receptacle
AH4#4B	425A 660/1100V Restrained Back to Back Receptacle
AH4#4BQR	425A 660/1100V Q/R Restrained Back to Back Receptacle
AH4#6BQR	425A 1100/3300V Q/R 6P Restrained Back to Back Receptacle
AH434BQR	425A 3300V Q/R Restrained Back to Back Receptacle
AR3#1R@	300A 660/1100V Restrained Dummy Plug
AR3#6R@	300A 1100V/3300 6P Restrained Dummy Plug
AR331S@	300A 3300V Restrained Dummy Plug
AR4#1R@	425A 660/1100V Restrained Dummy Plug
AR4#6R@	425A 1100V/3300 6P Restrained Dummy Plug
AR431S@	425A 3300V Restrained Dummy Plug

Note:
Marking:

1. # Volts: 6=660V, 1=1100V, 3=3300V
2. % Interior: S = Solid DMC, T = Teflon/Stainless
3. & Interior R = Rubber, T = Teflon/Stainless
4. @ Nose Cone: S=ST. Steel, Blank=Bronze.
5. * Gland: 3=Small, 4=large.

This brochure is distributed with the understanding that the authors and editors are not responsible for the results of any actions taken on the basis of the information in this work, or any errors or omission. Further, Minto Industrial Products is not engaged in rendering professional services. Minto Industrial Products expressly disclaims all and any liability to any person in respect of anything and of the consequences of anything done or omitted to be done by any such person in reliance whether whole or partial of the whole or any part of the contents of this publication. All rights reserved. No part of this work covered by copyright may be reproduced or copied in any form or by any means without the written permission of Minto Industrial Products.

minto industrial products Aflex Cables XLPE cables HARTLAND CABLES Quality Management · ISO 9001 Global-Mark.com.au®

Installation

- Confirm components suitable for application e.g. thimbles and grommets suitable for the conductors and cable.
- Plug fitting cable preparation.
  1. Slide the gland cap, grommet and plug body along the cable.
  2. Prepare the cable to the dimensions given in the strip back table.
  3. Crimp or solder the thimbles to the phase, pilot and earth cores.

- **Plug fitting**
  4. Fit the conductors to the appropriate location securing in place with screw through socket where appropriate.
  5. Assemble the plug, ensuring the interior rotation conforms to AS/NZS1299.
  6. Then fit dust cap (F-264L). Care should be taken not to damage the earth sleeve flamepath.
  7. Slide the grommet into position and bolt the gland cap firmly to the body.
  8. Note: The certified drawings form a part of the user instructions. Refer to them for further details.

- **Receptacle fitting**
  9. For Receptacle mounting dimensions refer to AS/NZS1299. The flange flamepath used to assemble the receptacle and Exd enclosure with minimum width 12.5mm and maximum gap 0.4mm.
  10. Attach to enclosure via special fasteners.
  11. The special fasteners and/or nuts shall be minimum grade 4.6 (yield stress 240MPa) or for stainless steel minimum grade A*-70 (Yield stress 450MPa)

- **Connection of Protective Earthing Conductors**

  - This range of plugs and receptacles has facility for earthing conductors up to 95 mm^2
  - It is the responsibility of the installer to determine and fit the correct sized earth conductors

Use

- Isolate power before connecting or disconnecting.

Assembly

- Ensure sockets are clean and serviceable.
- Correct pin alignment.
- Insert plug using receptacle operating mechanism.
- NB. For quick release mechanism, ensure the locking button is fully home.

Disassembly

- To remove plug from receptacle, utilise the operating mechanism.
- NB. For quick release, lift the locking button first.
- Fit dust cover to plug and receptacle.

Conditions of Use

- Some flameproof joints (flamepath) have dimensions that are different than the values given in table1 of IEC60079.1. Refer to the manufacture's drawings for details.
- The special fasteners used to assemble the plug and gland shall be minimum grade 4.6 (yield stress 240MPa) or for stainless steel minimum grade A*-70 (Yield stress 450MPa).

This brochure is distributed with the understanding that the authors and editors are not responsible for the results of any actions taken on the basis of the information in this work, or any errors or omission. Further, Minto Industrial Products is not engaged in rendering professional services. Minto Industrial Products expressly disclaims all and any liability to any person in respect of anything and of the consequences of anything done or omitted to be done by any such person in reliance whether whole or partial of the whole or any part of the contents of this publication. All rights reserved. No part of this work covered by copyright may be reproduced or copied in any form or by any means without the written permission of Minto Industrial Products.

Maintenance

- Inspection shall include cleanliness and compliance with certification documentation.
- Check as per AS/NZS 2290.1

Overhaul and Repair

- To be carried out by suitable workshop.
- It is recommended that the equipment is overhauled at intervals that do not exceed the requirements of AS/NZS2290.1.

Certification Details:

Certified to:	IEC 60079-0:2017: IEC 60079-1:2015; AS/NZS 1299:2009 (incorporating amendment No.1)
Certificate of Conformity:	IECEx ExTC 22.0037X and ANZEx 22.4181
Type of Protection:	Ex db I Mb
Type:	(AS/NZS 1299) Type A
Ingress Protection:	IP66/68 (2 metres for 30 minutes) for Restrained Plug, Restrained Back to Back Receptacle, Restrained Receptacle, Gland Adapter. IP66 only for Dummy Plug

Certification Nameplate Details:

TYPICAL 300/425A MOUNTING BRACKET RATING PLATE DETAILS	TYPICAL 300/425A RESTRAINED PLUG RATING PLATE DETAILS	TYPICAL 300/425A 6 PIN RESTRAINED PLUG RATING PLATE DETAILS

CMI
AV3
300/425A
Ex db I Mb
IECEx ExTC 22.0037X
ANZEx 22.4181
TYPE A
BATCH. xxxxx
	M.I.P.
	AF&#4%@*
	& AMPS 3 = 300A
	4 = 425A
	# VOLTS 6 = 660V
	1 = 1100V
	3 = 3300V
	% INTERIOR R = RUBBER
	S = SOLID DMC
	T = TEFLON/STAINLESS
	@ NOSE CONE S = St, Steel
	BLANK = BRONZE
	* GLAND 3 = SMALL
	4 = LARGE
	IP66/68
	Ex db I Mb
	IECEx ExTC 22.0037X
	ANZEx 22.4181
	TYPE A
	S.O. xxxxx-xx
	WARNING
	DO NOT SEPARATE WHEN ENERGIZED
		M.I.P.
		AF&#6%@*
		& AMPS 3 = 300A
		4 = 425A
		# VOLTS 1 = 1100V
		3 = 3300V
		% INTERIOR R = RUBBER
		T = TEFLON/STAINLESS
		@ NOSE CONE S = St, Steel
		BLANK = BRONZE
		* GLAND 3 = SMALL
		4 = LARGE
		IP66/68
		Ex db I Mb
		IECEx ExTC 22.0037X
		ANZEx 22.4181
		TYPE A
		S.O. xxxxx-xx
		WARNING
		DO NOT SEPARATE WHEN ENERGIZED

This brochure is distributed with the understanding that the authors and editors are not responsible for the results of any actions taken on the basis of the information in this work, or any errors or omission. Further, Minto Industrial Products is not engaged in rendering professional services. Minto Industrial Products expressly disclaims all and any liability to any person in respect of anything and of the consequences of anything done or omitted to be done by any such person in reliance whether whole or partial of the whole or any part of the contents of this publication. All rights reserved. No part of this work covered by copyright may be reproduced or copied in any form or by any means without the written permission of Minto Industrial Products.

minto industrial products Aflex Cables XLPE cables HARTLAND CABLES Quality Management ISO 9001 Global-Mark.com.au®

TYPICAL 300/425A RESTRAINED PLUG (INT GLAND) RATING PLATE DETAILS	TYPICAL 300/425A RESTRAINED RECEPTACLE RATING PLATE DETAILS	TYPICAL 300/425A 6 PIN RESTRAINED RECEPTACLE RATING PLATE DETAILS

M.I.P.
AF&#4S
& AMPS 3 = 300A
4 = 425A
# VOLTS 6 = 660V 	
1 = 1100V
IP66/68
Ex db I Mb
IECEx ExTC 22.0037X
ANZEx 22.4181
TYPE A
S.O. xxxxx-xx
WARNING
DO NOT SEPARATE WHEN ENERGIZED
	M.I.P.
	AG&#4B
	& AMPS 3 = 300A
	4 = 425A
	# VOLTS 6 = 660V
	1 = 1100V
	3 = 3300V
	IP66/68
	Ex db I Mb
	IECEx ExTC 22.0037X
	ANZEx 22.4181
	TYPE A
	S.O. xxxxx-xx
	WARNING
	DO NOT SEPARATE WHEN ENERGIZED
		M.I.P.
		AG&#6B
		& AMPS 3 = 300A
		4 = 425A
		# VOLTS 1 = 1100V
		3 = 3300V
		IP66/68
		Ex db I Mb
		IECEx ExTC 22.0037X
		ANZEx 22.4181
		TYPE A
		S.O. xxxxx-xx
		WARNING
		DO NOT SEPARATE WHEN ENERGIZED

TYPICAL 300/425A RESTRAINED BACK TO BACK RECEPTACLE RATING PLATE DETAILS	**TYPICAL 300/425A 6 PIN RESTRAINED BACK TO BACK RECEPTACLE RATING PLATE DETAILS**	**TYPICAL 300/425A RESTRAINED DUMMY PLUG RATING PLATE DETAILS**

M.I.P.
AH&#4B
& AMPS 3 = 300A
4 = 425A
# VOLTS 6 = 660V 	
1 = 1100V
3 = 3300V
IP66/68
Ex db I Mb
IECEx ExTC 22.0037X
ANZEx 22.4181
TYPE A
S.O. xxxxx-xx
WARNING
DO NOT SEPARATE WHEN ENERGIZED
	M.I.P.
	AH&#6B
	& AMPS 3 = 300A
	4 = 425A
	# VOLTS 1 = 1100V
	3 = 3300V
	IP66/68
	Ex db I Mb
	IECEx ExTC 22.0037X
	ANZEx 22.4181
	TYPE A
	S.O. xxxxx-xx
	WARNING
	DO NOT SEPARATE WHEN ENERGIZED
		M.I.P.
		AR&#1%@
		& AMPS 3 = 300A
		4 = 425A
		# VOLTS 6 = 660v
		1 = 1100V
		3 = 3300V
		% INTERIOR R = RUBBER
		S = SOLID DMC
		@ NOSE CONE S = St, Steel
		BLANK = BRONZE
		IP66
		Ex db I Mb
		IECEx ExTC 22.0037X
		ANZEx 22.4181
		TYPE A
		S.O. xxxxx-xx
		WARNING
		DO NOT SEPARATE WHEN ENERGIZED

TYPICAL 300/425A 6 PIN RESTRAINED DUMMY PLUG RATING PLATE DETAILS		

M.I.P.
AR&#6R@
& AMPS 3 = 300A
4 = 425A
# VOLTS 1 = 1100V 	
3 = 3300V
@ NOSE CONE S = St, Steel
BLANK = BRONZE
IP66
Ex db I Mb
IECEx ExTC 22.0037X
ANZEx 22.4181
TYPE A
S.O. xxxxx-xx
WARNING
DO NOT SEPARATE WHEN ENERGIZED		

Refer to Instruction TRP-2-2 for additional detailed instructions

This brochure is distributed with the understanding that the authors and editors are not responsible for the results of any actions taken on the basis of the information in this work, or any errors or omission. Further, Minto Industrial Products is not engaged in rendering professional services. Minto Industrial Products expressly disclaims all and any liability to any person in respect of anything and of the consequences of anything done or omitted to be done by any such person in reliance whether whole or partial of the whole or any part of the contents of this publication. All rights reserved. No part of this work covered by copyright may be reproduced or copied in any form or by any means without the written permission of Minto Industrial Products.

minto industrial products
Aflex Cables
XLPE cables
HARTLAND CABLES
Quality Management · ISO 9001
Global-Mark.com.au®

Additional Instructions for 300/425 AMP 660/1100/3300 VOLT Restrained Range

TRP-2-2

Cable Strip Back Dimensions

Strip Back Dimensions (mm)			
	A (Phase)	B (Earth)	C (Pilot)
AF314R3 /AF364R3 / AF414R3 / AF464R3	110	1 55	155
AF314R4 /AF364R4 / AF414R4 / AF464R4	130	180	120
AF334S3 / AF434S3 / AF316R3 / AF336R3 AF416R3 / AF436R3	128	120	130
AF334S4 / AF434S4 / AF316R4 / AF336R4 AF416R4 / AF436R4	158	150	100
AF314S / AF364S	145	165	120

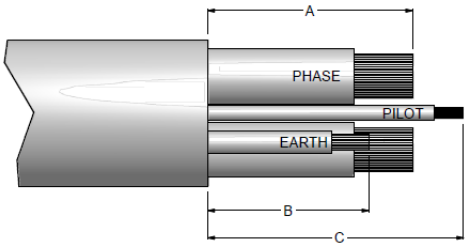

Note- Cables with semi conductive phase screening shall have the semi conductive screen removed back to the outer sheath.

Fitting of Cables

Note: The torque specified in the certification drawings is for the sealing test where the gland is tightened onto a steel mandrel.

- Cable fitting and testing shall be in compliance with AS/NZS 1747
- AS/NZS 1747:2022 sets out the method of cable installation and subsequent testing.
- Selection of thimbles
    a. Thimbles shall be sized so that the internal diameter of the thimble is within 1mm of the stripped conductor diameter.
- Grommet sizing
    a. Grommets shall be sized to the cable being used
    b. The grommet shall preferably be a conformal fit that fits tightly onto the cable.
    c. Grommets that fit loosely, will prevent the cable been effectively sealed in the gland.
- For guidance only, CMI recommend minimum torque settings for fitting cables to the range of 300/425A Restrained Plugs and Receptacle, Gland & Bracket
    a. This recommended minimum torque for the gland bolt / screw is: 18NM

Note:

- A suitable calibrated Torque Wrench shall be used for this process

- Initial testing of cable installation to gland:
    a. Undertake a “Twist Test” as outlined in AS/NZS 1747:2022.
    b. Undertake other tests as outlined in AS/NZS 1747:2022.
- Testing of plug / cable complete.
- Undertake the required tests as outlined in AS/NZS 1747:2022.

Fitting of Sockets to Cable Thimbles

- The following maximum torques shall be applied when screwing the sockets to the cable thimbles

    - Main (Phase) Sockets
        - 6.5 ~ 8Nm torque
    - Pilot Socket
        - 2.5 ~ 3 Nm torque

Note:

- A suitable calibrated Torque Wrench (recommended ¼ inch size) shall be used for this process

This brochure is distributed with the understanding that the authors and editors are not responsible for the results of any actions taken on the basis of the information in this work, or any errors or omission. Further, Minto Industrial Products is not engaged in rendering professional services. Minto Industrial Products expressly disclaims all and any liability to any person in respect of anything and of the consequences of anything done or omitted to be done by any such person in reliance whether whole or partial of the whole or any part of the contents of this publication. All rights reserved. No part of this work covered by copyright may be reproduced or copied in any form or by any means without the written permission of Minto Industrial Products.

minto industrial products
Aflex Cables
XLPE cables
HARTLAND CABLES
Quality Management · ISO 9001
Global-Mark.com.au®

300/425A Receptacle Mounting Details

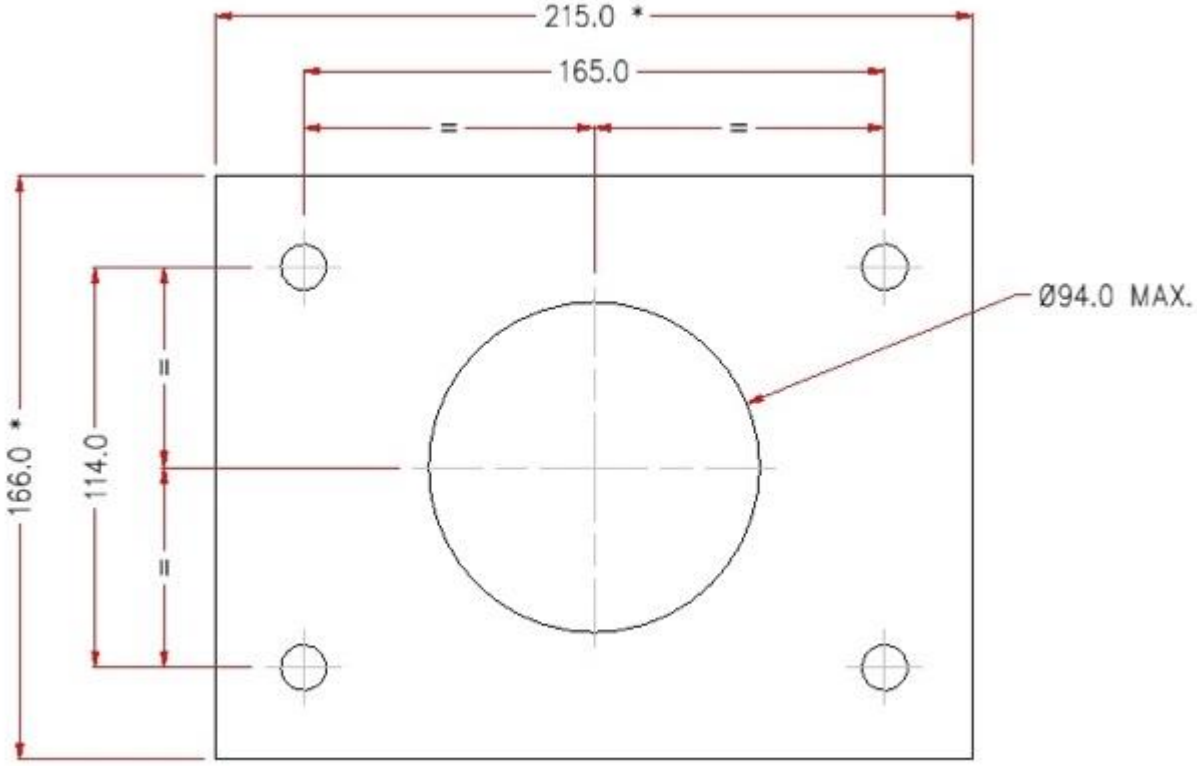

* Dimensions shown is the Enclosure Machining Area.
Untoleranced dimensions ±0.25

This brochure is distributed with the understanding that the authors and editors are not responsible for the results of any actions taken on the basis of the information in this work, or any errors or omission. Further, Minto Industrial Products is not engaged in rendering professional services. Minto Industrial Products expressly disclaims all and any liability to any person in respect of anything and of the consequences of anything done or omitted to be done by any such person in reliance whether whole or partial of the whole or any part of the contents of this publication. All rights reserved. No part of this work covered by copyright may be reproduced or copied in any form or by any means without the written permission of Minto Industrial Products.

minto industrial products
Aflex Cables
XLPE cables
HARTLAND CABLES
Quality Management · ISO 9001
Global-Mark.com.au®